ATLAS 1919 - 2019

ATLAS SINCE 1919

ROBUST. PRECISE. EFFICIENT.

- 17.5 - 18.5 t
- 115 kW
  EU Stage V
- 0.7 m^3

MADE IN GERMANY

CRAWLER EXCAVATOR 165LC *blue*

WWW.ATLASGMBH.COM

ATLAS – CONSTRUCTION MACHINERY MANUFACTURER WITH TRADITION

From person to person

When Hinrich Weyhausen started selling construction and agricultural machinery in 1919, he discovered that the machines which his customers actually needed were not available. So he listened to them carefully and went about building the machines himself – exactly according to the requirements of the people who used his machines every day. He carried out pioneering work with a passion under the brand name of Atlas.
His focus was always on the benefit of the machines. And nothing has changed for us in terms of this ideal today.

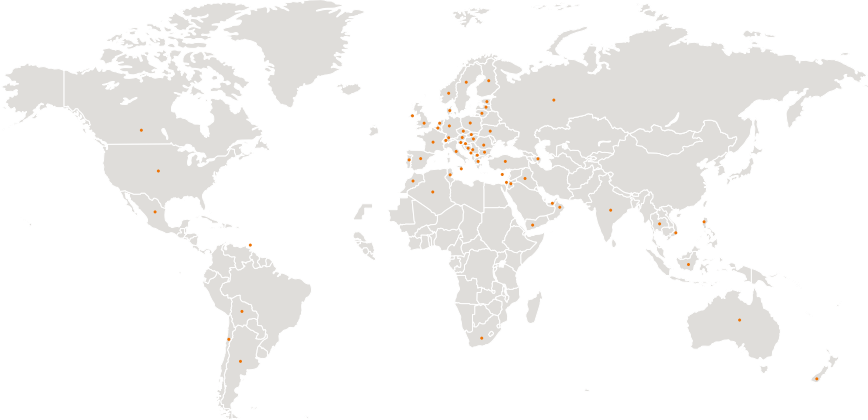

Atlas will make you strong with excellent products and a comprehensive service.

With highly motivated employees, a great deal of commitment and expertise ATLAS GmbH develops successful crane & excavator technologies. Numerous customers, engineers and experts all around the globe have made their contribution. The result is robust equipment to enable you to work more effectively and safely than ever before.

As our know-how grew, so too did our dealer and service network worldwide.
We can hence guarantee – in those days and today too – that we will always be on the spot when you need us.

Atlas manufactures a wide range of equipment for the construction, railroad, material handling and infrastructure industries. You will find more information on Atlas under **www.atlasgmbh.com.**

CONSTRUCTION

TRANSPORT

INFRASTRUCTURE

RECYCLING

CUSTOMER SATISFACTION IS OUR PRIORITY!

WE ARE COMMITTED
to providing our customers with highest quality products and services.

QUALITY STANDARDS AND CUSTOMER SATISFACTION
are measured in terms of service performance, reliability, relevance and timeliness.

OUR COMPANY'S MISSION, GOALS AND OBJECTIVES
are directed towards ongoing process improvement as a basis for strengthening our competitive position and for improving product quality and service standards.

QUALITY STANDARDS AND CUSTOMER SATISFACTION
are measured in terms of product performance and reliability.

PRODUCT RANGE
165LC *blue*

EXTENSIVE DEALER NETWORK
EXCELLENT SERVICE
CUSTOMER FOCUSED

ATLAS - The new excavator cabin

The new ATLAS cabin – Best climate, sharp display, digital and direct, more space, best view, extremely quiet, feel good

Clear control panel – Direct selection via keys or digital control via button

Move safely: Standard lateral- and rear view cameras

Most powerful air conditioning system - short airways - large lines - cross sections - silent

Best view – especially to the right

ATLAS - The new excavator cabin

Stay communicated - radio with USB connection - mobile phone tray by the left joystick

Lunch break - space for cool box with electrical connection - behind the driver's seat

Easy: Upper carriage lock at the push of a button on T

Bottle holder near the driver

Floor non-slip and
Easy to sweep – storage space for tools and materials

TECHNICAL SPECIFICATION 165LC

ENGINE

Gross power (ISO 14396) ..... 115 kW	Bore / cylinder stroke ..... 101 / 126	**STANDARD BASIC EQUIPMENT:**
Net power (ISO 9249) ..... 110 kW	Cooling system ..... Water-cooled	• Automatic idling system / Engine stop
Model ..... Deutz TCD 4.1 L4 EU Stage V	Air filter ..... Dry air filter	• Cold start assistance
Design ..... Turbocharger	Battery ..... 2 x 12 V / 100 Ah	• Diesel pre-filter
Cylinder capacity ..... 4038 cm^3	Generator ..... 24 V / 100 A	• Engine monitoring
Number of cylinders 4	Starter ..... 24 V / 4 kW	

HYDRAULIC SYSTEM

• AWE 5 system (Load sensing)	• Pipe break protection valves for lifting and articulated cylinders	• Operating modes:
• Load limit controlled high-performance pump	• Proportional grab and grab rotating function	F1 (Fine)
• Fuel-efficient flow-on-demand control	• 3 circuits for additional consumer loads possible	F2 (Eco)
• Sensitive, proportional, independent control	• Max. oil flow ..... 260 l/min	F3 (Power)
• Primary and secondary protection against overload	• Operating pressure ..... 320 bar	• Accumulator for emergency lowering of the arm system
• Suction valves for all work functions	• Cylinder end position damping	• Load-limit control

SWING ASSEMBLY

• Axial piston motor with priority valve	• Automatically controlled multi-disc brake	• Swing torque ..... 36 kNm
• Planetary transmission	• Two, two-stage valves	• Max. swing speed. 9/min

TRACTION DRIVE AND BRAKES

• Variable displacement motor	• Speed:	• Two automatic drive positions
• Double-acting brake valve	Stage 1 ..... max. 0-2.1 km/h	• Tractive force ..... 83,0 kN
• Hydraulic, service-free multidisc brakes	Stage 2 ..... max. 0-4.8 km/h	• Gradeability ..... 65 %

UNDERCARRIAGE

• Complete heavy duty undercarriage in X-design	• Automatic hydraulic controlled brakes and brake valve	• Chain tension adjustable via grease cylinder, pre-tension by elastomer tensioner
	• Integrated chain guides on the guide wheels as well as chain guides middle side aisle	• Lubricated sealed chain drive quality B4HD

DRIVER´S CAB

• Meets latest safety standards (ROPS)	**DRIVER'S SEAT:**	**MONITORING:**
• Extra large entry zone	• Comfort seat with headrest	• Operating data display screen
• Spacious leg room	• Arm rests and lumbar support	• Automatic system for monitoring, warning and storage of data
• Radio preparation with mute function	• Seat adjustable separately from console	• Rear view security camera
• Ready for electric cooling box	• Air suspension	• Right side camera
• Different options for storage, compartment for documents	• Heated	
• Heat-absorbing glass, tinted windows	• Horizontal and vertical suspension	**CLIMATE CONTROL:**
• Excellent all-way visibility	• Lumbar support	• Automatic climate control
• Bottle holder		• Excellent air distribution through optimally arranged nozzles
	CONTROL:	• Refrigerant R134a
	• Ergonomic joysticks with proportional slide control	
	• Indicators, controls and operating switches are clearly arranged	**SOUND LEVELS:**
		• ISO 6396 (L_pA) in driver's cab ..... 69 dB(A)
		• 2000/14 EG (L_wA) ambience level ..... 95 dB(A)

WORKING EQUIPMENT 165LC

BASIC UNIT

A 3.82	ATLAS-Hydraulic-Crawler excavator 160LC with continuously rotating uppercarriage and two lifting cylinders, but without base arm, with ATLAS cabin 935 with sound absorption, heating by utilizing the engine cooling water heat and air conditioning, swing radius 1980 mm, track 2200 mm, track-chain 600 mm wide

DRIVE OPTION

6103303	Track 2000 mm, Overall Length 4500 mm B4HD- Drive parts
6051193	Track 2200 mm, Overall Length 5000 mm B4HD-Drive parts

BOOM VARIANTS

C 3.3 M	Monoblock boom, one stick cylinder, Length 4220 m
C 3.3 MG	Monoblock boom straight with, stick cylinder, length 4300 m
C 3.41	Base arm, adjusting cylinder, hose rupture safety, incl. hydraulic mounting kit, suitable for C 346
C 3.46	Boom, one stick cylender, suitable for C 3.41, length 2940 mm

CONTINUED: BOOM VARIANTS

C 3.461	Boom, one stick cylender, suitable for C 3.41, length 3575 mm
C 3.462	Boom, one stick cylender, suitable for C 3.41, length 4075 mm

ATTACHMENTS

		Capacity (SAE)	Schnittbreite
F 415	Bucket	0.67 m^3	850 mm
F 418	Bucket	1.12 m^3	1300 mm
G 644	Trenching bucket	0.56 m^3	2000 mm

BUCKET CYLINDER

F 3.1	Bucket cylinder, with bucket linkage

STICK

D 3.2	Stick, length 1960 mm, for Monoblock- and adjustable boom
D 3.3	Stick, length 2500 mm, for Monoblock- and adjustable boom
D 3.31	Stick, length 3060 mm, for adjustable boom
D 3.5	Stick, length 3550 mm, for adjustable boom

ADDITIONAL EQUIPMENT

• Refueling pump	• LED working lights	• Electric cooling box
• Beacon light	• Alarm-signal while driving	• Radio with USB
• Cabin Sliding door	• Auxiliary heating with water circuit	• PS/GSM telemetric system for monitoring of operating data, consumption, position
• Cab protection guard	• Automatically controlled and monitored electric central lubrication system for uppercarriage and arm equipment	
• Cab elevation	• Biodegradable oil	**Other additional equipment:** See price list
• 270° camera system	• Premium Driver seat (Actimo Evolution)	**Special options:** upon request

FILL CAPACITIES

• Fuel tank.....240 Liter	• Engine oil.....10 Liter	• Hydraulic system.....200 Liter
• Cooling system.....35 Liter	• Hydraulic tank.....125 Liter	• Ad Blue®.....20 Liter

WORKING RANGES 165LC

Monoblock boom 4.30 m (C3.3MG)

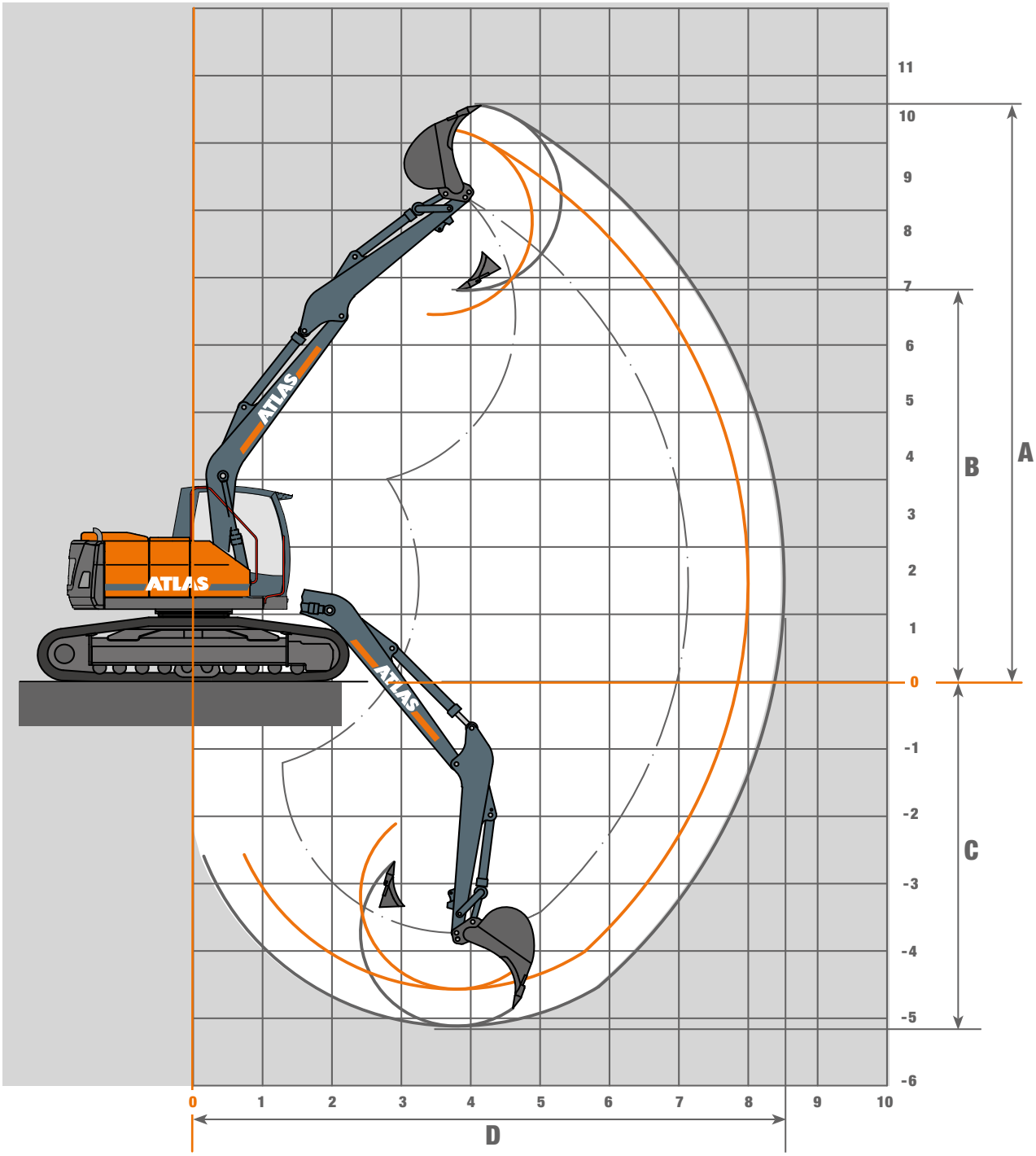

STICK D 32 - Length 1960 mm			
Equipment: A 3.82, C 3.3MG, D 32, F31, F 415			
A	Max. lifting height	mm	8200
B	Max. dump heigth	mm	5460
C	Max. Digging depth	mm	4570
D	Max. reach	mm	8000
	Breakout force	kN	106
	Tear-out force	kN	64

STICK D 33 - Length 2500 mm			
Equipment: A 3.82, C 3.3MG, D 33, F31, F 415			
A	Max. lifting height	mm	8560
B	Max. dump heigth	mm	5810
C	Max. Digging depth	mm	5110
D	Max. reach	mm	8520
	Breakout force	kN	106
	Tear-out force	kN	55

LIFTING CAPACITIES 165LC

HEIGHTS	2.5 m		3.0 m		3.5 m		4.0 m		4.5 m		5.0 m		5.5 m		6.0 m		6.5 m		7.0 m	
	LENGTHS	LATERAL	LENGTHS	LATERAL	LENGTHS	LATERAL	LENGTHS	LATERAL	LENGTHS	LATERAL	LENGTHS	LATERAL	LENGTHS	LATERAL	LENGTHS	LATERAL	LENGTHS	LATERAL	LENGTHS	LATERAL
Monoblock boom 4.30 m (C3.3MG) with Stick 1.96 m (D32).																				
+ 6.0 m	-	-	-	-	-	-	-	-	3657	3657	-	-	-	-	-	-	-	-	-	-
+ 4.5 m	-	-	-	-	-	-	3833	3833	3614	3614	3319	3319	-	-	-	-	-	-	-	-
+ 3.0 m	-	-	-	-	5127	5127	4501	4501	4054	4054	3719	3719	3459	3336*	3249	2955*	-	-	-	-
+ 1.5 m	-	-	-	-	6065	5983*	5163	4971*	4517	4238*	4033	3683*	3655	3247*	3344	2895*	3055	2605*	-	-
+ 0 m	-	-	5,3	5,0	5930	5858*	5171	4851*	4549	4138*	4041	3604*	3615	3189*	3230	2858*	-	-	-	-
- 1.5 m	5981	5981	5517	5517	4972	4972	4439	4439	3945	3945	3483	3483	3012	3012	-	-	-	-	-	-
- 3.0 m	-	-	3297	3297	3031	3031	2666	2666	2144	2144	-	-	-	-	-	-	-	-	-	-
Monoblock boom 4.30 m (C3.3MG) with Stick 2.50 m (D33).																				
+ 6.0 m	-	-	-	-	-	-	-	-	-	-	3146	3146	-	-	-	-	-	-	-	-
+ 4.5 m	-	-	-	-	-	-	-	-	3245	3245	3120	3120	3017	3017	2939	2939	-	-	-	-
+ 3.0 m	-	-	5282	5282	4585	4585	4097	4097	3736	3736	3457	3457	3236	3236	3055	2962*	2904	2643*	-	-
+ 1.5 m	-	-	-	-	5756	5756	4913	4913	4314	4255*	3867	3687*	3520	3243*	3238	2885*	2998	2590*	2688	2342*
+ 0 m	-	-	5447	5447	6042	5831*	5192	4829*	4541	4115*	4029	3578*	3615	3159*	3267	2824*	2949	2550*	-	-
- 1.5 m	6251	6251	6199	6199	5410	5410	4748	4748	4192	4082*	3717	3551*	3293	3141*	2882	2817*	-	-	-	-
- 3.0 m	4812	4812	4342	4342	3886	3886	3446	3446	3008	3008	2533	2533	-	-	-	-	-	-	-	-

The specified max. loading capacities in kilogrammes include a stability of 25% or are calculated at 87% of the hydraulic lifting power, as per ISO10567.
These values are applicable at the tip of the arm with optimum positioning of the corresponding arm system and with the pressure switched on. * Value limited due to hydraulics.

WORKING RANGES 165LC

Adjustable boom 3.58 m (C346.1)

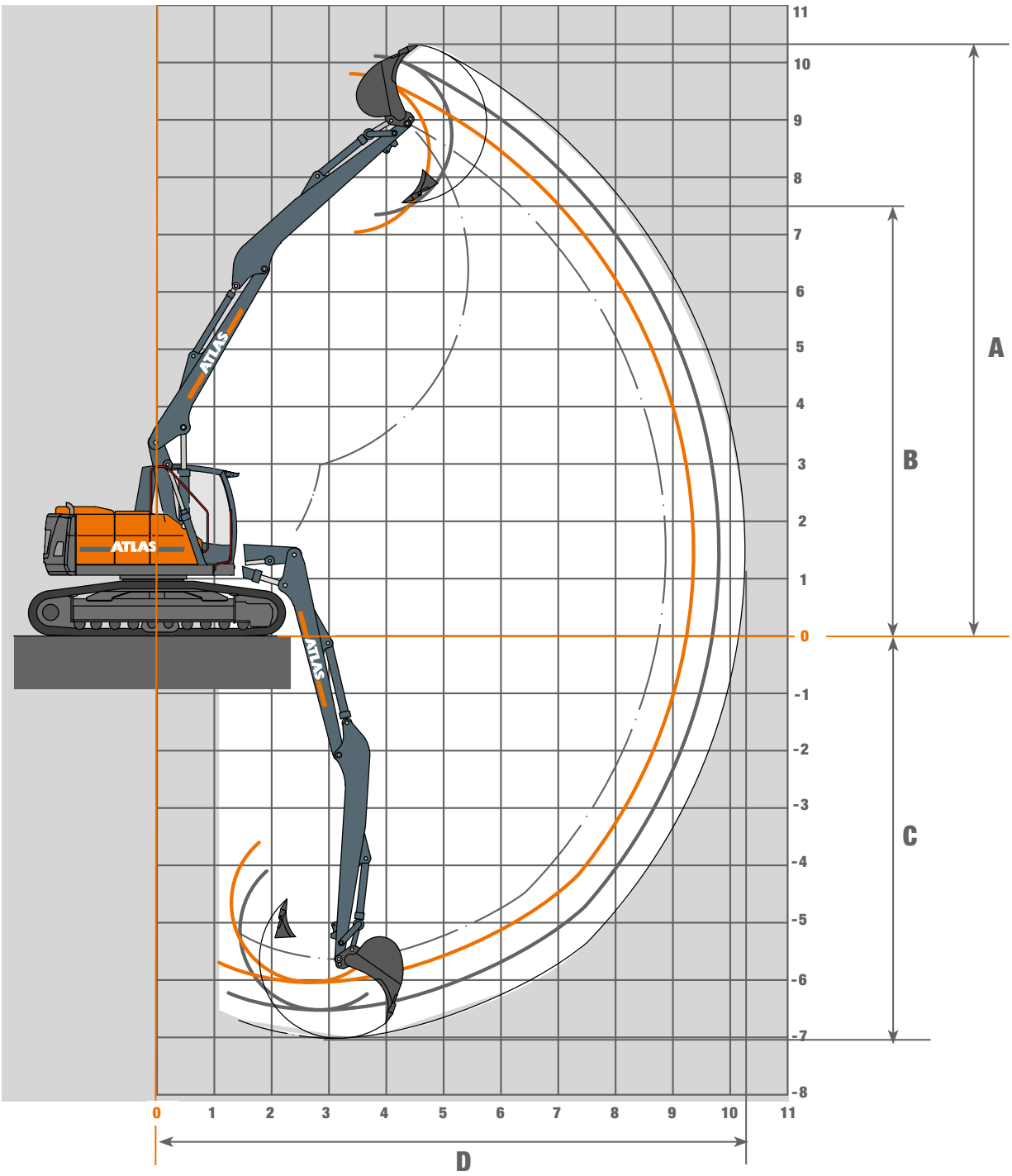

STICK D 33 - LENGTH 2500 MM			
Equipment: A 3.82, C 346.1, D 33, F31, F 415			
A	Max. lifting height	mm	9800
B	Max. dump heigth	mm	7040
C	Max. Digging depth	mm	6040
D	Max. reach	mm	9360
	Breakout force	kN	106
	Tearout force	kN	64

STICK D 331 - LENGTH 3060 MM			
Equipment: A 3.82, C346.1, D 331, F31, F 415			
A	Max. lifting height	mm	10120
B	Max. dump heigth	mm	7350
C	Max. Digging depth	mm	6520
D	Max. reach	mm	9810
	Breakout force	kN	106
	Tearout force	kN	46

STICK D 35 - LENGTH 3550 MM			
Equipment: A 3.82, C 346.1, D 35, F31, F 415			
A	Max. lifting height	mm	10310
B	Max. dump heigth	mm	7550
C	Max. Digging depth	mm	7020
D	Max. reach	mm	10260
	Breakout force	kN	106
	Tearout force	kN	46

LIFTING CAPACITIES 165LC

HEIGHTS	2.5 m		3.0 m		3.5 m		4.5 m		5.0 m		6.0 m		7.0 m		7.5 m		8.0 m		8.5 m	
	LENGTHS	LATERAL	LENGTHS	LATERAL	LENGTHS	LATERAL	LENGTHS	LATERAL	LENGTHS	LATERAL	LENGTHS	LATERAL	LENGTHS	LATERAL	LENGTHS	LATERAL	LENGTHS	LATERAL	LENGTHS	LATERAL
Adjustable boom 1.95 m (C3.41) and 3.58 m (C346.1) with Stick 2.50 m (D33).																				
+ 7.5 m	-	-	-	-	-	-	2954	2954	-	-	-	-	-	-	-	-	-	-	-	-
+ 6.0 m	-	-	-	-	-	-	2799	2799	2686	2686	2530	2530	-	-	-	-	-	-	-	-
+ 4.5 m	-	-	-	-	3648	3648	3071	3071	2870	2870	2575	2575	2381	2352*	-	-	-	-	-	-
+ 3.0 m	-	-	4197	4197	4393	4393	3596	3596	3249	3249	2767	2767	2448	2333	2323	2091*	-	-	-	-
+ 1.5 m	5455	5455	5426	5426	5063	5063	4068	4020	3602	3518	2959	2800*	2530	2320*	2355	2061*	-	-	-	-
+ 0 m	7391	7391	6571	6571	5620	5590*	4182	4016*	3708	3514*	3020	2823	2568	2252*	2344	2012*	-	-	-	-
- 1.5 m	8721	8721	6931	6931	5739	5715	4265	4124*	3783	3652	3135	2772*	2398	2190*	-	-	-	-	-	-
- 3.0 m	9111	9111	7290	7290	6083	5958*	5958*	4096*	3777	3508*	2513	2513	-	-	-	-	-	-	-	-
Adjustable boom 1.95 m (C3.41) and 3.58 m (C346.1) with Stick 3.06 m (D331).																				
+ 7.5 m	-	-	-	-	-	-			2550	2550	-	-	-	-	-	-	-	-	-	-
+ 6.0 m	-	-	-	-	-	-	-	-	2443	2443	2312	2312	1551	1551	-	-	-	-	-	-
+ 4.5 m	-	-	-	-	-	-	2801	2801	2642	2642	2397	2397	2222	2222	2158	2128*	-	-	-	-
+ 3.0 m	-	-	-	-	4272	4272	3334	3334	3035	3035	2612	2612	2324	2312*	2212	2111*	2112	1893*	-	-
+ 1.5 m	5105	5105	5136	5136	4912	4912	3876	3876	3441	3441	2841	2768*	2442	2285*	2285	2092*	2141	1866*	-	-
+ 0 m	6897	6897	6283	6283	5495	5495	4100	3946*	3633	3450	2955	2755*	2487	2281*	2314	2029*	2126	1819*	-	-
- 1.5 m	8342	8342	6754	6754	5592	5577	4151	4013	3677	3518*	3001	2803*	2536	2192*	2202	1971*	-	-	-	-
- 3.0 m	8842	8842	7039	7039	5842	5840	4425	4139*	3897	3527*	2944	2691*	1790	1790	-	-	-	-	-	-
Adjustable boom 1.95 m (C3.41) and 3.58 m (C346.1) with Stick 3.55 m (D35).																				
+ 7.5 m	-	-	-	-	-	-	-	-	-	-	1778	1778	-	-	-	-	-	-	-	-
+ 6.0 m	-	-	-	-	-	-	-	-	-	-	2102	2102	1963	1963	1205	1205	-	-	-	-
+ 4.5 m	-	-	-	-	-	-	-	-	2398	2398	2217	2217	2076	2076	2020	2020	1701	1701	-	-
+ 3.0 m	-	-	4369	4369	3790	3790	3062	3062	2818	2818	2460	2460	2210	2210	2111	2111	2024	1939*	1635	1635
+ 1.5 m	5939	5939	5600	5600	4977	4977	3688	3688	3289	3289	2735	2735	2367	2279*	2223	2088*	2096	1908*	1977	1710*
+ 0 m	6790	6790	6231	6231	5486	5474	4058	3944	3588	3446*	2919	2740*	2464	2272*	2282	2070*	2124	1853*	1954	1668*
- 1.5 m	8005	8005	6684	6684	5474	5540	4114	3969	3641	3471*	2957	2781*	2500	2228*	2312	1990*	2038	1796*	-	-
- 3.0 m	8667	8667	6894	6894	5711	5701	4244	4146	3769	3587*	3073	2712*	2318	2152*	1828	1828	-	-	-	-
- 4.5 m	9036	9036	7175	7175	5850	-5844	4069	4004*	3373	3373	2060	2060	-	-	-	-	-	-	-	-

The specified max. loading capacities in kilogrammes include a stability of 25% or are calculated at 87% of the hydraulic lifting power, as per ISO10567.
These values are applicable at the tip of the arm with optimum positioning of the corresponding arm system and with the pressure switched on. * Value limited due to hydraulics.

WORKING RANGES 165LC

Monoblock boom 7.10 m (C3.7MU)

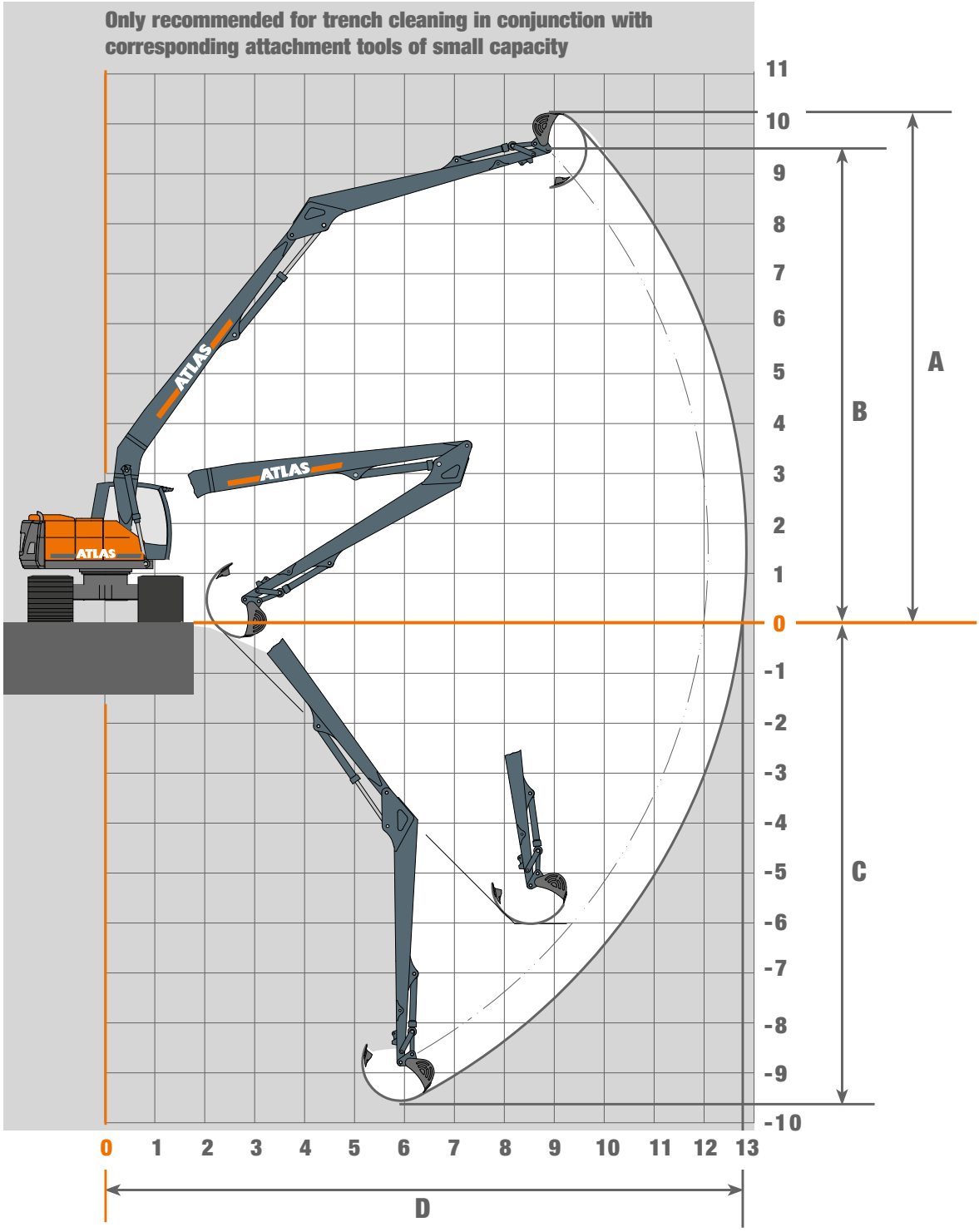

STICK D3.7U - LENGTH 5400 mm			
Equipment: A 3.82, C 346.1, D 35, F31, F 415			
A	Max. lifting height	mm	10200
B	Max. dump heigth	mm	9500
C	Max. Digging depth	mm	9550
D	Max. reach	mm	12800
	Breakout force	kN	106
	Tearout force	kN	46

LIFTING CAPACITIES 165LC

	2.5 m		3.5 m		4.5 m		5.5 m		6.5 m		7.5 m		8.5 m		9.5 m		10.5 m		11.5 m	
HEIGHTS	LENGTHS	LATERAL	LENGTHS	LATERAL	LENGTHS	LATERAL	LENGTHS	LATERAL	LENGTHS	LATERAL	LENGTHS	LATERAL	LENGTHS	LATERAL	LENGTHS	LATERAL	LENGTHS	LATERAL	LENGTHS	LATERAL
Base arm 7.1 m (C3.7MU) with Stick 5.4 m (D3.7U)																				
+ 9.0 m	-	-	-	-	-	-	-	-	-	-	-	-	-	-	-	-	-	-	-	-
+ 7.5 m	-	-	-	-	-	-	-	-	-	-	-	-	-	-	983	983	-	-	-	-
+ 6.0 m	-	-	-	-	-	-	-	-	-	-	-	-	-	-	1002	1002	944	944	-	-
+ 4.5 m	-	-	-	-	-	-	-	-	-	-	-	-	1141	1141	1047	1047	970	970	905	905
+ 3.0 m	-	-	-	-	-	-	-	-	1591	1591	1385	1385	1230	1230	1108	1108	1008	1008	924	924
+ 1.5 m	-	-	3912	3912	2797	2797	2178	2178	1787	1787	1518	1518	1320	1320	1169	1169	1047	1047	943	909*
0 m	-	-	-	-	3091	3091	2388	2388	1935	1935	1622	1622	1392	1392	1216	1203*	1073	1020*	950	868*
- 1.5 m	-	-	-	-	3145	3133*	2464	2408*	2001	1935*	1672	1596*	1425	1338*	1232	1135*	1072	971*	928	837*
- 3.0 m	-	-	-	-	3017	3017	2406	2307*	1972	1844*	1648	1519*	1401	1279*	1200	1092*	1026	943*	-	-
- 4.5 m	-	-	-	-	2738	2738	2224	2224	1841	1816*	1546	1495*	1304	1259*	1096	1081*	-	-	-	-
- 6.0 m	-	-	-	-	2291	2291	1893	1893	1579	1579	1317	1317	1085	1085	-	-	-	-	-	-
- 7.5 m	-	-	1918	1918	1617	1617	1357	1357	1119	1119	883	883	-	-	-	-	-	-	-	-

The specified max. loading capacities in kilogrammes include a stability of 25% or are calculated at 87% of the hydraulic lifting power, as per ISO10567.
These values are applicable at the tip of the arm with optimum positioning of the corresponding arm system and with the pressure switched on. * Value limited due to hydraulics.

DIMENSION 165LC

165LC Transport postion

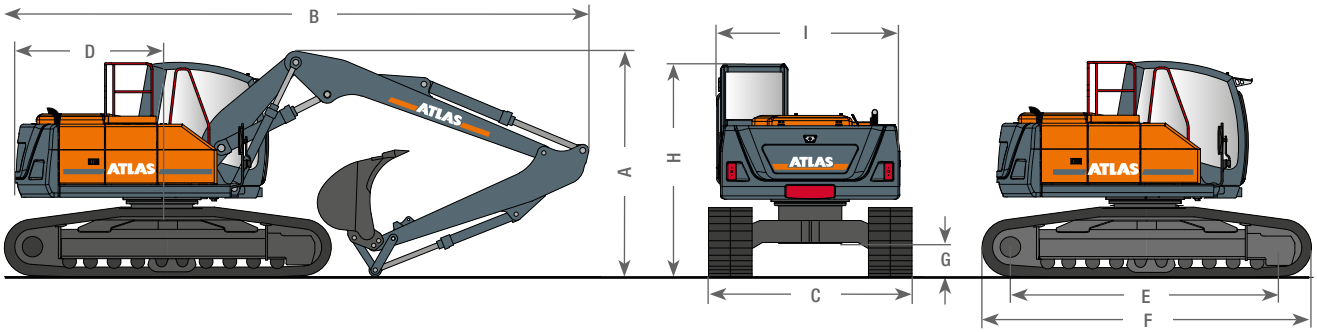

A	TRANSPORT HEIGHT		B	TRANSPORT LENGTH	
	Adjustable boom, 1.95 m (C3.41), 2.94 m (C346), 2.50 m (D33)	3.00 m		Adjustable boom, 1.95 m (C3.41), 2.94 m (C346), 3.55 m (D35)	7.65 m
	Adjustable boom, 1.95 m (C3.41), 2.94 m (C346), 3.06 m (D331)	3.10 m		Adjustable boom, 1.95 m (C3.41), 2.94 m (C346), 3.06 m (D331)	7.65 m
	Adjustable boom, 1.95 m (C3.41), 2.94 m (C346), 3.55 m (D35)	3.00 m		Adjustable boom, 1.95 m (C3.41), 2.94 m (C346), 3.55 m (D35)	7.75 m
	Adjustable boom, 1.95 m (C3.41), 3.58 m (C346.1), 2.50 m (D33)	3.10 m		Adjustable boom, 1.95 m (C3.41), 3.58 m (C346.1), 2.50 m (D33)	8.05 m
	Adjustable boom, 1.95 m (C3.41), 3.58 m (C346.1), 3.06 m (D331)	3.10 m		Adjustable boom, 1.95 m (C3.41), 3.58 m (C346.1), 3.06 m (D331)	8.20 m
	Monoblock 4.30 m (C3.3MG) with Stick 1.96 m (D32)	2.95 m		Monoblock 4.22 m (C3.3M) with Stick 1.96 m (D32)	7.55 m
	Monoblock 4.30 m (C3.3MG) with Stick 2.50 m (D33)	2.95 m		Monoblock 4.30 m (C3.3MG) with Stick 2.50 m (D33)	7.55 m
C	TRANSPORT WIDTH WHEEL	BASE 2.20 m	F	DRIVELENGTH	4.50 m
	Base plate width 600 mm	2.80 m	G	GROUND CLEARANCE	0.46 m
D	REAR SWIVEL RADIUS	1.98 m	H	HEIGTH OVER CABIN	2.95 m
E	BEARING CHAIN LENGTH	3.71 m	I	SUPERSTRUCTURE WIDTH	2.50 m

Design changes reserved, data not binding. Devices comply with the new European safety regulations.

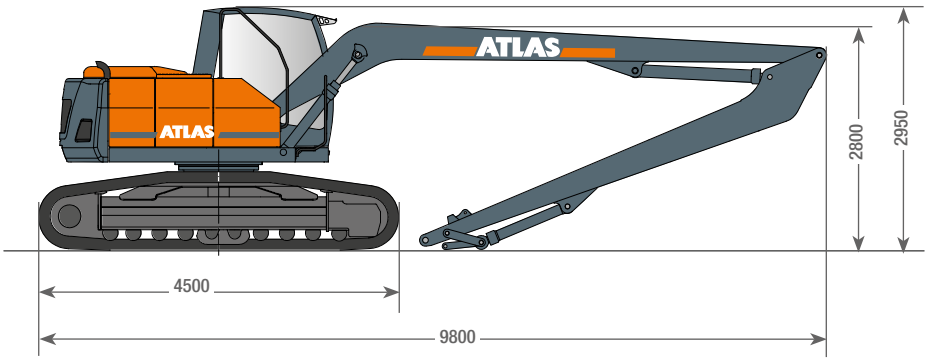

165LC-EN (1) Effective date: 12/2023. Product specifications and prices are subject to change without notice or obligation. The photographs and/or drawings in this document are for illustrative purposes only. Refer to the appropriate Operator's Manual for instructions on the proper use of this equipment. Failure to follow the appropriate Operator's Manual when using our equipment or to otherwise act irresponsibly may result in serious injury or death. The only warranty applicable to our equipment is the standard written warranty applicable to the particular product and sale and Atlas makes no other warranty, express or implied. The only warranty applicable to our equipment is the standard written warranty applicable to the particular product and sale and Atlas makes no other warranty, express or implied. Products and services listed may be trademarks, service marks or trade-names of Atlas GmbH and/or its subsidiaries. All rights are reserved. Atlas® is a registered trademark of Atlas GmbH.
Copyright © 2023 Atlas GmbH.
Ref. no. 0000000

GANDERKESEE FACTORY
Atlas GmbH
Atlasstraße 6
D-27777 Ganderkesee,
Germany

Tel.: +49 (0) 4222 954 0
Fax: +49 (0) 4222 954 220
E-mail: info@atlasgmbh.com
www.atlasgmbh.com

VECHTA FACTORY
Atlas GmbH
Theodor-Heuss-Str. 3
D-49377 Vechta
Germany

T: +49 (0) 4441 954 0
F: +49 (0) 4441 954 299
E-mail: info@atlasgmbh.com
www.atlasgmbh.com

DELMENHORST FACTORY
Atlas GmbH
Stedinger Straße 324
D-27751 Delmenhorst
Germany

T: +49 (0) 4221 49 10
F: +49 (0) 4221 49 14 43
E-mail: info@atlasgmbh.com
www.atlasgmbh.com

ATLAS CRANES UK LTD
NATIONAL SALES & SERVICE FACILITY
Wharfedale Road,
Euroway Trading Est.
Bradford, England BD4 6SL
United Kingdom
T: +44 8444 99 66 88
F: +44 1274 65 37 85
E-mail: atlasuk@atlasgmbh.com
www.atlas-cranes.co.uk
www.atlasgmbh.com

ATLAS
SINCE 1919

Status: 12/2023