ATLAS 1919 - 2019

ATLAS SINCE 1919

STABLE. STRONG. STEADY.

- 23.6 - 25.9 t
- 129 KW (175 HP)
  EU Stage V
- 10.25 - 12.65 m

MATERIAL HANDLING MACHINE 250MH

WWW.ATLASGMBH.COM

ATLAS – CONSTRUCTION MACHINERY MANUFACTURER WITH TRADITION

From person to person

When Hinrich Weyhausen started selling construction and agricultural machinery in 1919, he discovered that the machines which his customers actually needed were not available. So he listened to them carefully and went about building the machines himself – exactly according to the requirements of the people who used his machines every day. He carried out pioneering work with a passion under the brand name of Atlas.
His focus was always on the benefit of the machines. And nothing has changed for us in terms of this ideal today.

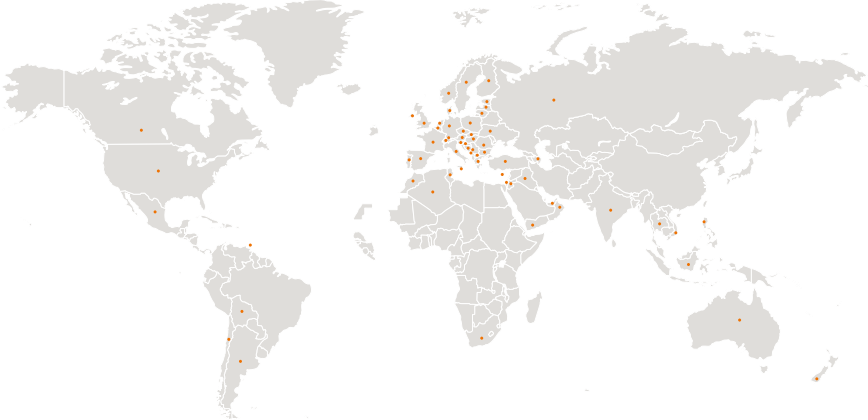

Atlas will make you strong with excellent products and a comprehensive service.

With highly motivated employees, a great deal of commitment and expertise ATLAS GmbH develops successful crane & excavator technologies. Numerous customers, engineers and experts all around the globe have made their contribution. The result is robust equipment to enable you to work more effectively and safely than ever before.

As our know-how grew, so too did our dealer and service network worldwide.
We can hence guarantee – in those days and today too – that we will always be on the spot when you need us.

Atlas manufactures a wide range of equipment for the construction, railroad, material handling and infrastructure industries. You will find more information on Atlas under **www.atlasgmbh.com.**

CONSTRUCTION

TRANSPORT

INFRASTRUCTURE

RECYCLING

CUSTOMER SATISFACTION IS OUR PRIORITY!

WE ARE COMMITTED
to providing our customers with highest quality products and services.

QUALITY STANDARDS AND CUSTOMER SATISFACTION
are measured in terms of service performance, reliability, relevance and timeliness.

OUR COMPANY'S MISSION, GOALS AND OBJECTIVES
are directed towards ongoing process improvement as a basis for strengthening our competitive position and for improving product quality and service standards.

QUALITY STANDARDS AND CUSTOMER SATISFACTION
are measured in terms of product performance and reliability.

PRODUCT RANGE
250MH

EXTENSIVE DEALER NETWORK
EXCELLENT SERVICE
CUSTOMER FOCUSED

ATLAS - The new excavator cabin

The new ATLAS cabin – Best climate, sharp display, digital and direct, more space, best view, extremely quiet, feel good

Clear control panel – Direct selection via keys or digital control via button.....

Most powerful air conditioning system - short airways - large lines - cross sections - silent

Move safely: Standard lateral- and rear view cameras

Best view – especially to the right

ATLAS - The new excavator cabin

Stay communicated - radio with USB connection - mobile phone tray by the left joystick

Lunch break - space for cool box with electrical connection - behind the driver's seat

Easy: Upper carriage lock at the push of a button on T

Bottle holder near the driver

Floor non-slip and
Easy to sweep – storage space for tools and materials

TECHNICAL SPECIFICATION 250MH

ENGINE

Power rating.....129 kW (175 HP)	Bore / cylinder stroke.....101 / 126	**STANDARD BASIC EQUIPMENT:**
RPM.....1800/min	Cooling system.....Water-cooled	• Automatic idling system / Engine stop
Model.....Cummins / QSB 6.7 EU Stage V	Air filter.....Dry air filter	• Diesel pre-filter
Design.....Turbocharger / intercooler	Battery.....2 x 12 V / 100 Ah	• Engine monitoring
Cylinder capacity.....6700 cm^3	Generator.....24 V / 70 A	
Number of cylinders.....6	Starter.....24 V / 3.2 kW	

HYDRAULIC SYSTEM

• AWE 5 system (Load sensing)	• Pipe break protection valves for lifting and articulated cylinders	• Operating modes:
• Load limit controlled high-performance pump	• Proportional grab and grab rotating function	F1 (Fine)
• Fuel-efficient flow-on-demand control	• 3 circuits for additional consumer loads possible	F2 (Eco)
• Sensitive, proportional, independent control	• Max. oil flow.....380 l/min	F3 (Power)
• Primary and secondary protection against overload	• Max. operating pressure.....340 (370) bar	• Accumulator for emergency lowering of the arm system
• Suction valves for all work functions	• Cylinder end position damping	• Load-limit control

SWING ASSEMBLY

• Axial piston motor with priority valve	• Automatically controlled multi-disc brake	• Swing torque.....63.2 kNm
• Planetary transmission	• Two, two-stage valves	• Max. swing speed.....11/min

TRACTION DRIVE AND BRAKES

• Variable displacement motor	• Automotive traveling and cruise control:	• Tractive force.....91.8 kN
• Power-shift transmission	• Max. speed.....20 km/h	• Gradeability.....55 %
• Double-acting brake valve	• Off-road speed.....5 km/h	• Dual-circuit brake system.....Multi-disc
• Travel direction pre-selection via switch in joystick	• Crawling speed.....1 km/h	• Parking brake.....Multi-disc

UNDERCARRIAGE

• Steering axle with automatic oscillating axle locking	• Heavy duty axles	• STD tires: Mitas 10.00-20 16PR EM23
• Additional axis locking via left joystick	• Toolbox in undercarriage	

TIRES

OPTIONAL:

• 8-road tyres 10.00-20 16PR Nokia	• 8-road tyres 10.00-20 Super elastic (up to 16 km/h)	• 8-road tyres 215/70 R22.5 Caliber Power Grip 23
• 8-road tyres 10.00-20 16PR profile for asphalt use	• 8-road tyres 315/70 R22.5 Marked with a band, Grader type	

WORKING EQUIPMENT 250MH

DRIVER´S CAB

- Meets latest safety standards (ROPS)
- Extra large entry zone
- Spacious leg room
- Radio preparation with mute function
- Ready for electric cooling box
- Different options for storage, compartment for documents
- Heat-absorbing glass, tinted windows
- Excellent all-way visibility
- Bottle holder

DRIVER'S SEAT:

- Comfort seat with headrest
- Arm rests and lumbar support
- Seat adjustable separately from console
- Air suspension
- Heated
- Horizontal and vertical suspension
- Lumbar support

CONTROL:

- Ergonomic joysticks with proportional slide control
- Slim steering column, height and tilt adjustable
- Indicators, controls and operating switches are clearly arranged
- Swing axle lock in the left joystick

MONITORING:

- Operating data display screen
- Automatic system for monitoring, warning and storage of data
- Rear view security camera
- Right side camera

CLIMATE CONTROL:

- Automatic climate control
- Excellent air distribution through optimally arranged nozzles
- Refrigerant R134a

SOUND LEVELS:

- ISO 6396 (L_pA) in driver's cab ..... 71 dB(A)
- 2000/14 EG (L_wA) ambience level ..... 100 dB(A)

ADDITIONAL EQUIPMENT

- Beacon light
- Gear protection
- Cabin Sliding door
- Cab protection guard
- Cab elevation
- Joystick steering
- 270º camera system
- LED working lights
- Alarm-signal while driving
- Auxiliary heating with water circuit
- Automatic working brake
- Switch hydraulic attachment kit, supports separately at front and rear
- Hydraulic add-on kit, switch supports axially separately
- Proportional control of supports by slide in joystick
- Automatically controlled and monitored electric central lubrication system for uppercarriage and arm equipment
- Premium Driver seat (Actimo Evolution)
- Electric cooling box
- Radio with USB
- GPS/GSM telemetric system for monitoring of operating data, consumption, position
- Biodegradable oil
- Refueling pump

Other additional equipment: See price list

Special options: upon request

FILL CAPACITIES

- Fuel tank .....382 litres
- Cooling system.....42 litres
- Engine oil.....20 litres
- Hydraulic tank .....224 litres
- Hydraulic system.....400 litres
- Ad Blue® .....50 litres

OPERATING WEIGHTS

	MONOBLOCK BOOM 6.20 m (C24.5i)	MONOBLOCK BOOM 6.20 m (C24.5i)	MONOBLOCK BOOM 6.80 m (C24.6i)	ADJUSTABLE BOOM Base arm 1.95 m (C21.41) Boom 3.83 m (C21.461)
	Stick 4.80 m (D21.15i)	**Stick 4.80 m (D21.15is)**	**Stick 5.30 m (D21.16i)**	**Stick 2.65 m (D21.33)**
Support dozer blade				
SDB / outriggers	25.2 t	25.2 t	25.6 t	25.7 t
4 support outriggers	25.4 t	25.4 t	25.8 t	25.9 t

Operating weight with driver, solid rubber tyres, completely filled implement and 1.6 t for attachments and 1.4 t for lift-cab (option)

ATTACHMENTS

- Clamshell grab
- Orange peel grab
- Load hook
- Load lifting magnet
- Log grab
- Sorting grab

WORKING RANGES 250MH

Loading boom 6.20 m (C24.5i) and stick 4.80 m (D21.15i)

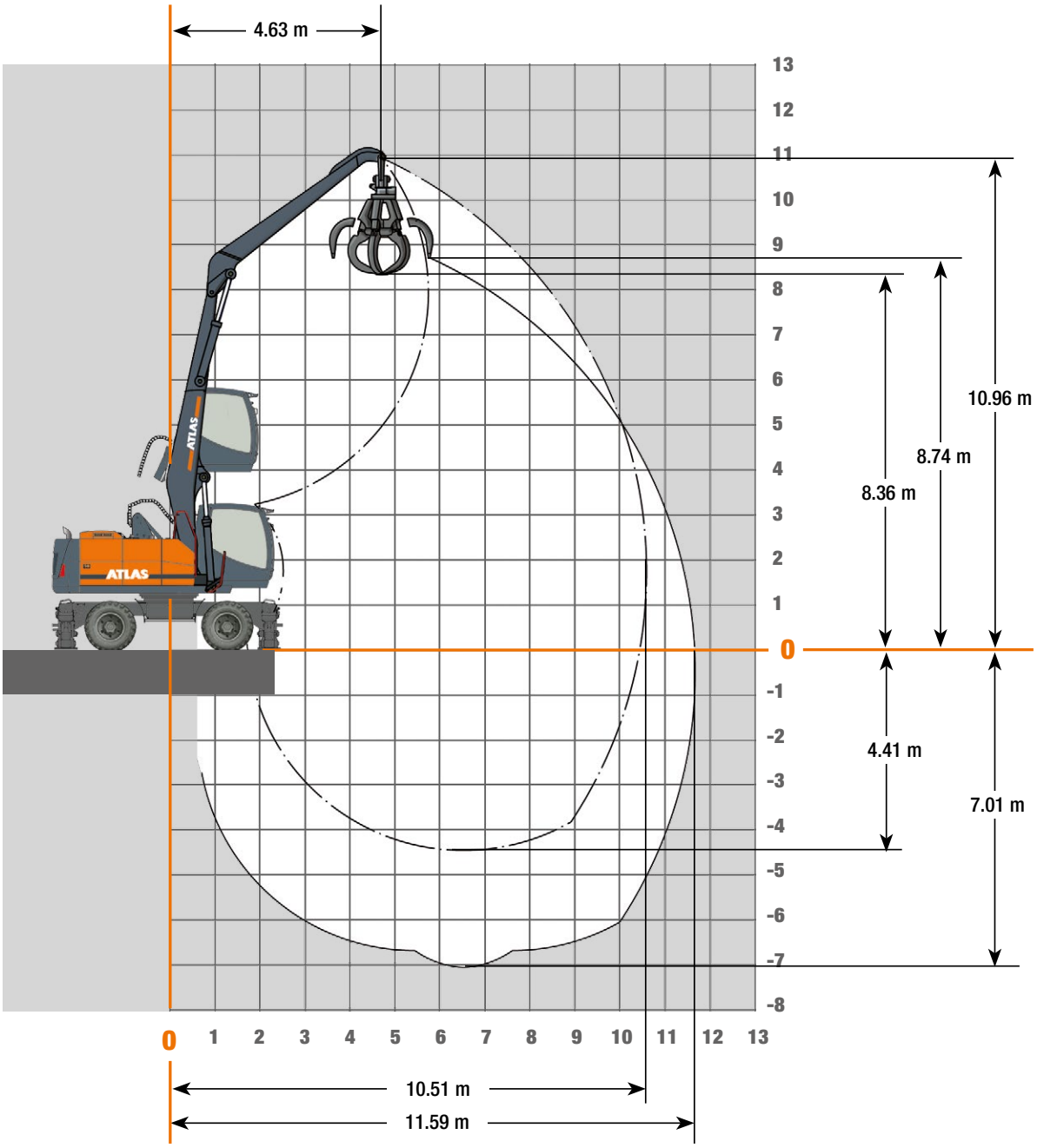

Attachments

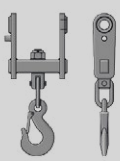
Load hook

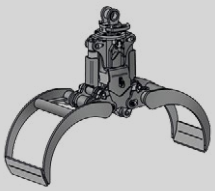
Log grab

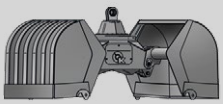
Clamshell grab

Orange peel grab

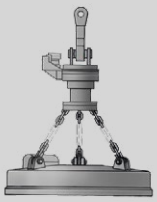
Load lifting magnet

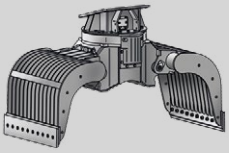
Sorting grapple

LIFTING CAPACITIES 250MH

Lifting Capacities Loading boom 6.20 m (C24.5i) with stick 4.80 m (D21.15i). Max. reach 11.59 m

HEIGHT		3.0 m		4.5 m		6.0 m		7.5 m		9.0 m	
		FRONT	LATERAL	FRONT	LATERAL	FRONT	LATERAL	FRONT	LATERAL	FRONT	LATERAL
9.0 m	Outriggers lowered					6.2*	6.2*	5.4*	5.4*		
	Outriggers raised					5.7	4.7	3.9	3.3		
7.5 m	Outriggers lowered					6.1*	6.1*	5.4*	5.4*	4.7*	4.2
	Outriggers raised					5.7	4.7	4.0	3.3	3.0	2.4
6.0 m	Outriggers lowered					6.3*	6.3*	5.4*	5.4*	4.7*	4.2
	Outriggers raised					5.6	4.6	4.0	3.3	3.0	2.4
4.5 m	Outriggers lowered			8.4*	8.4*	6.7*	6.7*	5.6*	5.5	4.8*	4.2
	Outriggers raised			8.4*	6.9	5.4	4.4	3.9	3.2	2.9	2.4
3.0 m	Outriggers lowered	14.7*	14.7*	9.6*	9.6*	7.2*	7.2*	5.8*	5.4	4.8*	4.1
	Outriggers raised	14.7*	11.8	7.9	6.3	5.2	4.2	3.7	3.0	2.8	2.3
1.5 m	Outriggers lowered	2.8*	2.8*	10.4*	10.4*	7.5*	7.3	5.8*	5.2	4.7*	4.0
	Outriggers raised	2.8*	2.8*	7.3	5.8	4.9	3.9	3.6	2.9	2.8	2.3
0 m	Outriggers lowered			10.0*	10.0*	7.3*	7.0	5.6*	5.1	4.4*	3.9
	Outriggers raised			6.9	5.4	4.7	3.7	3.5	2.8	2.7	2.2
- 1.5 m	Outriggers lowered			8.6*	8.6*	6.6*	6.6*	5.0*	5.0	3.8*	3.8*
	Outriggers raised			6.8	5.3	4.6	3.6	3.4	2.7	2.7	2.1
- 3.0 m	Outriggers lowered			6.5*	6.5*	5.2*	5.2*	4.0*	4.0*	2.8*	2.8*
	Outriggers raised			6.5*	5.3	4.5	3.6	3.4	2.7	2.7	2.2

The specified max. loading capacities in tonnes include a stability of 25% or are calculated at 87% of the hydraulic lifting power, as per ISO10567.
These values are applicable at the tip of the arm (without Bucket tipping cylinder, system of redirect levers) with optimum positioning of the corresponding arm system and with the pressure switched on.
Weights of attached load carrying accessories (grab, magnet, load hook, etc.) are not included with the load carrying values. * Value limited due to hydraulics.

WORKING RANGES 250MH

Loading boom 6.80 m (C24.6i) and Stick 5.30 m (D21.16i)

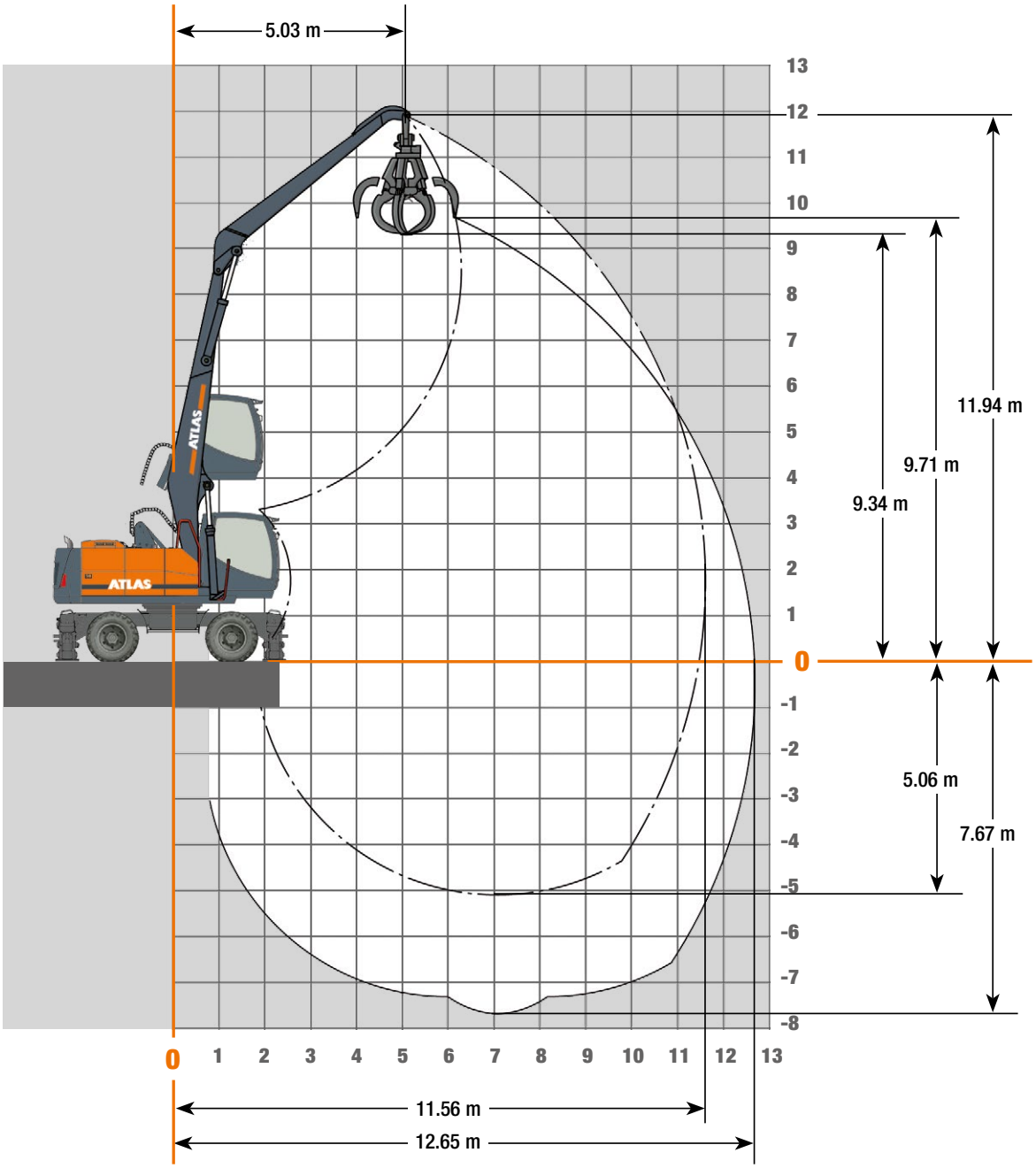

Attachments

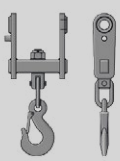
Load hook

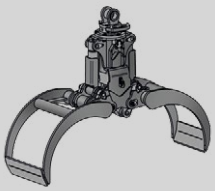
Log grab

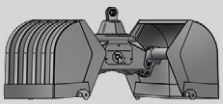
Clamshell grab

Orange peel grab

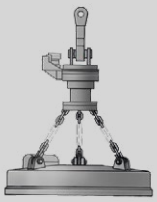
Load lifting magnet

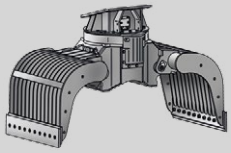
Sorting grapple

LIFTING CAPACITIES 250MH

Lifting Capacities Loading boom 6.80 m (C24.6i) with stick 5.30 m (D21.16i). Max. reach 12.65 m

HEIGHT		3.0 m		4.5 m		6.0 m		7.5 m		9.0 m		10.5 m	
		FRONT	LATERAL	FRONT	LATERAL	FRONT	LATERAL	FRONT	LATERAL	FRONT	LATERAL	FRONT	LATERAL
12.0 m	Outriggers lowered												
	Outriggers raised												
10.5 m	Outriggers lowered					5.9*	5.9*						
	Outriggers raised					5.7	4.7						
9.0 m	Outriggers lowered							5.0*	5.0*				
	Outriggers raised							4.0	3.3				
7.5 m	Outriggers lowered							5.0*	5.0*	4.4*	4.3		
	Outriggers raised							4.0	3.3	3.0	2.5		
6.0 m	Outriggers lowered					6.0*	6.0*	5.2*	5.2*	4.5*	4.2	3.9*	3.3
	Outriggers raised					5.6	4.6	4.0	3.3	3.0	2.4	2.3	1.9
4.5 m	Outriggers lowered			8.2*	8.2*	6.5*	6.5*	5.4*	5.4*	4.6*	4.2	3.9*	3.3
	Outriggers raised			8.2*	6.9	5.4	4.4	3.8	3.2	2.9	2.4	2.3	1.8
3.0 m	Outriggers lowered	14.7*	14.7*	9.4*	9.4*	7.0*	7.0*	5.6*	5.3	4.6*	4.0	3.9*	3.2
	Outriggers raised	14.7*	11.6	7.9	6.3	5.1	4.1	3.7	3.0	2.8	2.3	2.2	1.8
1.5 m	Outriggers lowered			10.1*	10.1*	7.3*	7.2	5.7*	5.1	4.6*	3.9	3.8*	3.2
	Outriggers raised			7.2	5.6	4.8	3.8	3.5	2.8	2.7	2.2	2.2	1.7
0 m	Outriggers lowered			9.8*	9.8*	7.2*	6.9	5.6*	5.0	4.4*	3.9	3.5*	3.1
	Outriggers raised			6.7	5.2	4.5	3.6	3.4	2.7	2.6	2.0	2.1	1.7
- 1.5 m	Outriggers lowered			8.5*	8.5*	6.5*	6.5*	5.0*	4.9	4.0*	3.9		
	Outriggers raised			6.6	5.0	4.4	3.5	3.3	2.6	2.6	2.0		
- 3.0 m	Outriggers lowered			6.6*	6.6*	5.4*	5.4*	4.2*	4.2*	3.2*	3.2*		
	Outriggers raised			6.5	5.0	4.3	3.4	3.2	2.6	2.5	2.0		
- 4.5 m	Outriggers lowered					3.7*	3.7*	3.0*	3.0*	2.0*	2.0*		
	Outriggers raised					3.7*	3.4	3.0*	2.6	2.0*	2.0		

The specified max. loading capacities in tonnes include a stability of 25% or are calculated at 87% of the hydraulic lifting power. as per ISO10567.
These values are applicable at the tip of the arm (without Bucket tipping cylinder, system of redirect levers) with optimum positioning of the corresponding arm system and with the pressure switched on.
Weights of attached load carrying accessories (grab, magnet, load hook, etc.) are not included with the load carrying values. * Value limited due to hydraulics.

WORKING RANGES 250MH

Loading boom 6.20 m (C24.5i) and Stick 4.80 m (D21.15is)

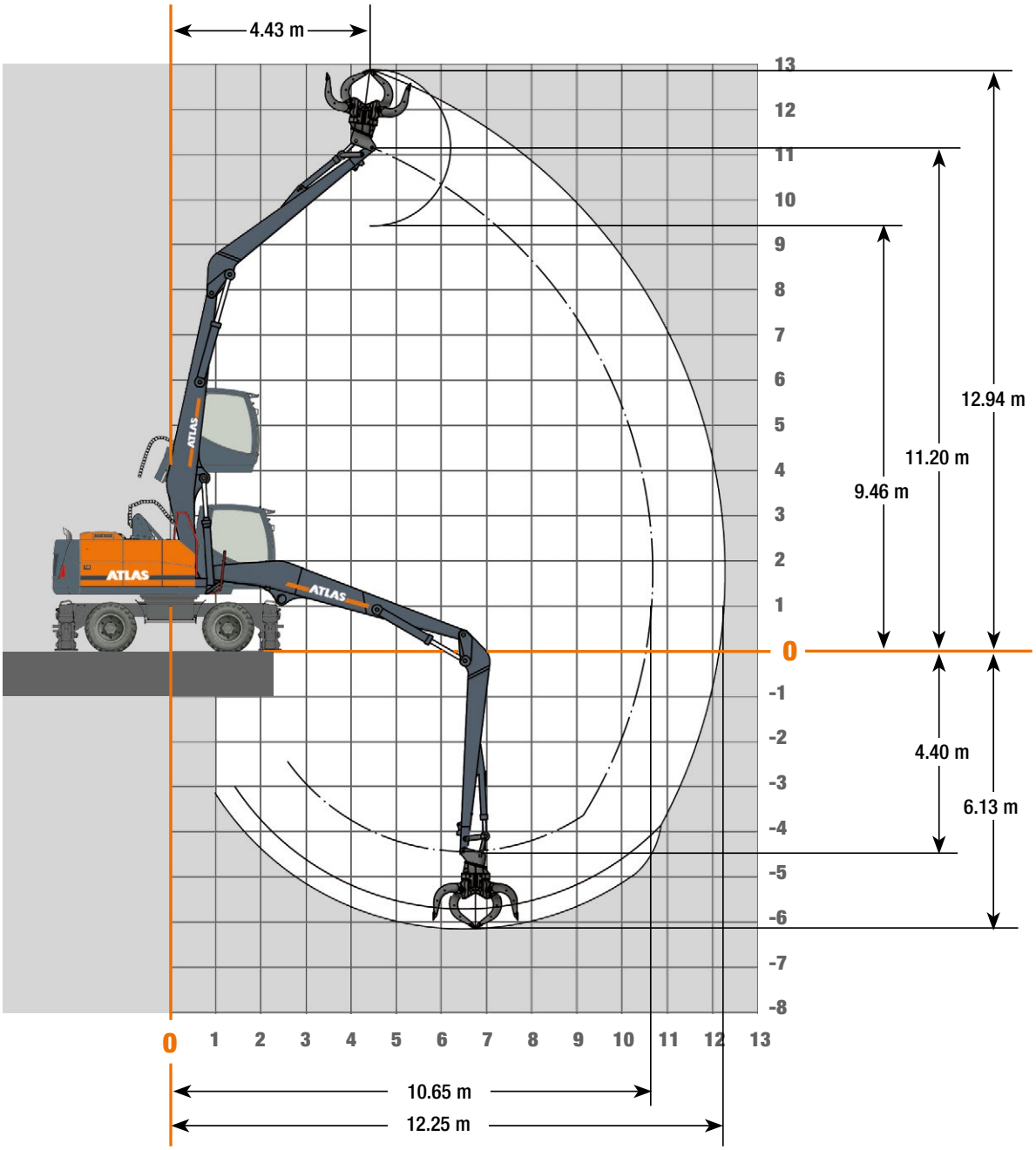

Attachments

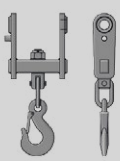
Load hook

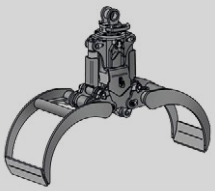
Log grab

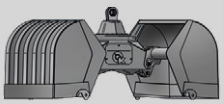
Clamshell grab

Orange peel grab

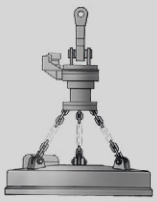
Load lifting magnet

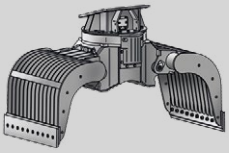
Sorting grapple

LIFTING CAPACITIES 250MH

Lifting Capacities Loading boom 6.20 m (C24.5i) with stick 4.80 m (D21.15is). Max. reach 12.25 m

HEIGHT		3.0 m		4.5 m		6.0 m		7.5 m		9.0 m	
		FRONT	LATERAL	FRONT	LATERAL	FRONT	LATERAL	FRONT	LATERAL	FRONT	LATERAL
12.0 m	Outriggers lowered										
	Outriggers raised										
10.5 m	Outriggers lowered										
	Outriggers raised										
9.0 m	Outriggers lowered					6.2*	6.2*	5.4*	5.4*		
	Outriggers raised					5.6	4.7	3.9	3.3		
7.5 m	Outriggers lowered					6.1*	6.1*	5.4*	5.4*	4.7*	4.2
	Outriggers raised					5.7	4.7	4.0	3.3	3.0	2.4
6.0 m	Outriggers lowered					6.3*	6.3*	5.4*	5.4*	4.7*	4.2
	Outriggers raised					5.6	4.6	4.0	3.3	3.0	2.4
4.5 m	Outriggers lowered			8.4*	8.4*	6.7*	6.7*	5.6*	5.5	4.8*	4.2
	Outriggers raised			8.4*	6.9	5.4	4.4	3.9	3.1	2.4	3.0
3.0 m	Outriggers lowered	14.8*	14.8*	9.6*	9.6*	7.2*	7.2*	5.8*	5.4	4.8*	4.1
	Outriggers raised	14.8*	11.8	7.9	6.4	5.2	4.2	3.7	3.0	2.8	2.3
1.5 m	Outriggers lowered	2.9*	2.9*	10.4*	10.4*	7.5*	7.3	5.9*	5.2	4.7*	4.0
	Outriggers raised	2.9*	2.9*	7.4	5.8	4.9	3.9	3.6	2.9	2.8	2.2
0 m	Outriggers lowered			10.0*	10.0*	7.4*	7.1	5.7*	5.1	4.4*	4.0
	Outriggers raised			7.0	5.5	4.7	3.7	3.5	2.8	2.7	2.2
- 1.5 m	Outriggers lowered			8.7*	8.7*	6.6*	6.6*	5.1*	5.0	3.8*	3.8*
	Outriggers raised			6.8	5.3	4.6	3.7	3.4	2.8	2.1	2.7
- 3.0 m	Outriggers lowered			6.5*	6.5*	5.2*	5.2*	4.0*	4.0*	2.8*	2.8*
	Outriggers raised			6.5*	5.3	4.6	3.6	3.4	2.7	2.7	2.2
- 4.5 m	Outriggers lowered										
	Outriggers raised										

The specified max. loading capacities in tonnes include a stability of 25% or are calculated at 87% of the hydraulic lifting power, as per ISO10567.
These values are applicable at the tip of the arm (without Bucket tipping cylinder, system of redirect levers) with optimum positioning of the corresponding arm system and with the pressure switched on.
Weights of attached load carrying accessories (grab, magnet, load hook, etc.) are not included with the load carrying values. * Value limited due to hydraulics.

WORKING RANGES 250MH

Adjustable boom: Base arm 1.95 m (C21.41) and boom 3.83 m (C21.461) with stick 2.65 m (D21.33)

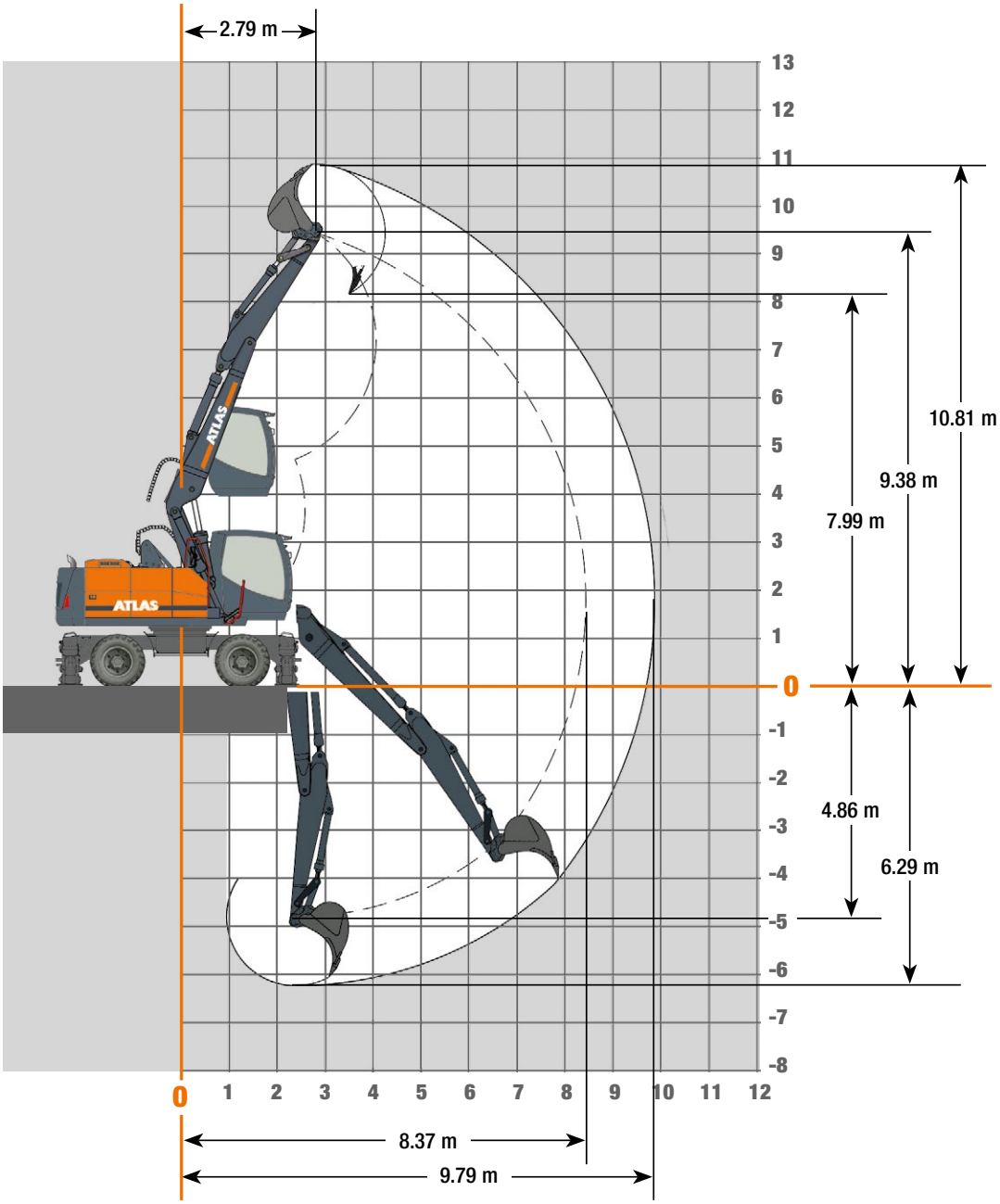

Attachments

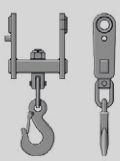
Load hook

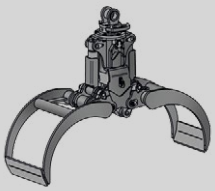
Log grab

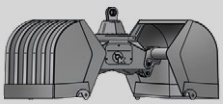
Clamshell grab

Orange peel grab

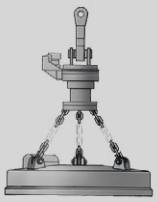
Load lifting magnet

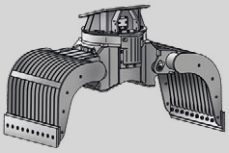
Sorting grapple

LIFTING CAPACITIES 250MH

Lifting Capacities Adjustable boom: Base arm 1.95 m (C21.41) and boom 3.83 m (C21.461) with stick 2.65 m (D21.33). Max reach 9.79 m

Height	Undercarriage type		3.0 m	3.5 m	4.0 m	4.5 m	5.0 m	5.5 m	6.0 m	6.5 m	7.0 m	7.5 m	8.0 m
+ 9.0 m	FRONT	SDB supported		6869									
		SDB raised		6869									
	LATERAL	SDB supported		6869									
		SDB raised		6869									
+7.5 m	FRONT	SDB supported				5413	5420	5470	4090				
		SDB raised				5413	5420	5470	4090				
	LATERAL	SDB supported				5413	5420	5470	4090				
		SDB raised				5413	5420	5187*	4090				
+6.0 m	FRONT	SDB supported			5733	5587	5461	5358	5281	5240	4972		
		SDB raised			5733	5587	5461	5358	5281	4911*	4332*		
	LATERAL	SDB supported			5733	5587	5461	5358	5281	5240	4972		
		SDB raised			5733	5587	5461	5201*	4597*	4066*	3558*		
+ 4.5 m	FRONT	SDB supported	8632	7957	7233	6695	6281	5956	5698	5494	5337	5231	
		SDB raised	8632	7957	7233	6695	6281	5956	5441*	4871*	4402	3900*	
	LATERAL	SDB supported	8632	7957	7233	6695	6281	5956	5698	5494	5337	5231	
		SDB raised	8632	7957	7233	6695	5817*	5111*	4545*	4086*	3633*	3203*	
+ 3.0 m	FRONT	SDB supported	8540	9515	9611	8403	7547	6910	6420	6034	5725	5466	5260
		SDB raised	8540	9515	9358*	7918*	6839	6009	5354*	4818*	4383	3894*	3471
	LATERAL	SDB supported	8540	9515	9611	8403	7547	6910	6420	6034	5725	5462*	4970*
		SDB raised	8540	9188*	7637	6525*	5674*	5013*	4480*	4050*	3623*	3201*	2839*
+ 1.5 m	FRONT	SDB supported	11468	11439	11078	9854	8685	7804	7120	6577	6135	5753	5446
		SDB raised	11468	11221	9210*	7799*	6751*	5949*	5313	4809*	4309*	3827*	3422*
	LATERAL	SDB supported	11468	11439	11078	9854	8685	7804	7120	6577	5956*	5449	4918*
		SDB raised	11303	9028*	7510*	6422*	5605*	4965*	4458*	4032*	3544*	3137*	2792*
+ 0 m	FRONT	SDB supported	14157	13121	11822	10349	9186	8252	7495	6870	6343	5894	5470
		SDB raised	14157	11290*	9238*	7816*	6776*	5987	5388*	4714*	4171*	3721*	3348*
	LATERAL	SDB supported	14157	13121	11822	10349	9186	8244	7328*	6589	6004	5372*	4843*
		SDB raised	11393*	9085*	7547*	6455*	5643*	5004*	4419*	3864*	3408*	3032*	2718*
-1.5 m	FRONT	SDB supported	16697	13988	11965	10450	9276	8341	7583	6977	6423	5616	
		SDB raised	14769*	11528*	9438*	7930*	6818*	5894*	5132*	4529*	4035*	3642*	
	LATERAL	SDB supported	16697	13988	11965	10450	9276	8329*	7461	6613*	5876*	5290*	
		SDB raised	11332*	9000*	7448*	6336*	5495*	4781*	4169*	3672*	3271*	2952*	
-3.0 m	FRONT	SDB supported	17200	14332	12312	10832	9585	8455	7325	6054			
		SDB raised	14886*	11470*	9266*	7683*	6519*	5656*	4978*	4442*			
	LATERAL	SDB supported	17200	14332	12312	10832	9585	8455	7325	6054			
		SDB raised	11188*	8870*	7291*	6106*	5214*	4545*	4013*	3590*			
-4.5 m	FRONT	SDB supported	15161										
		SDB raised	14748*										
	LATERAL	SDB supported	15161										
		SDB raised	11068*										

The specified max. loading capacities in kilogrammes (kg) include a stability of 25% or are calculated at 87% of the hydraulic lifting power, as per ISO10567. These values are applicable at the tip of the arm with optimum positioning of the corresponding arm system. Weights of attached load carrying accessories (grab, magnet, load hook, etc.) are not included with the load carrying values. *Value limited due to excavator stability.

DIMENSIONS 250MH

250MH Transport position

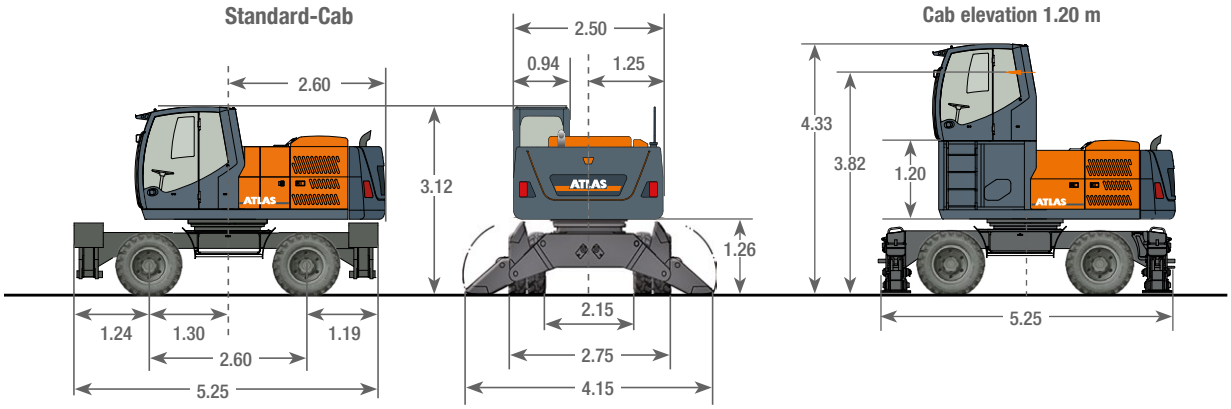

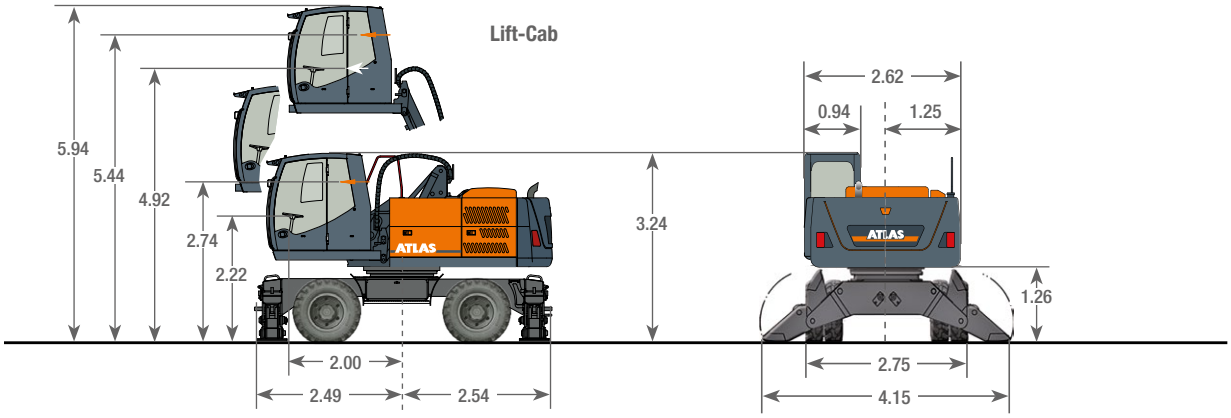

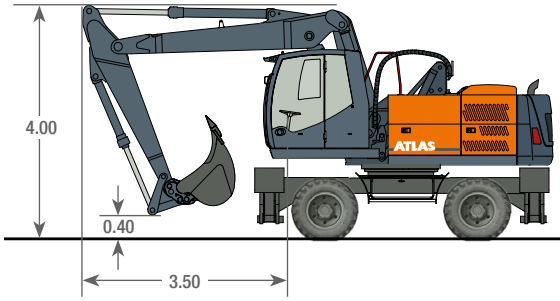

Travel position A25.39 Lift, C21.41, C21.461

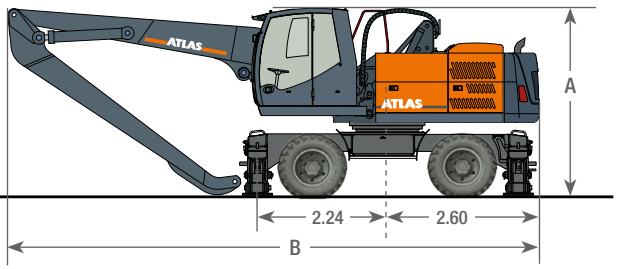

Transport position A25.39 Lift, C21.5l, D21.15l

A	TRANSPORT HEIGHT	B	TRANSPORT LENGTH
	Loading boom 6.20 m with Stick 4.80 m.....3.24 m		Loading boom 6.20 with Stick 4.80 m.....9.20 m
	Loading boom 6.80 m with Stick 5.30 m .....3.24 m		Loading boom 6.80 with Stick 5.30 m.....9.80 m
	Adjustable Boom 1.95 m / 3,83 m with stick 2.65 m .....3.24 m		Adjustable Boom 1.95 m / 3,83 m with stick 2.65 m ...9.00 m

Further cabin versions on demand.

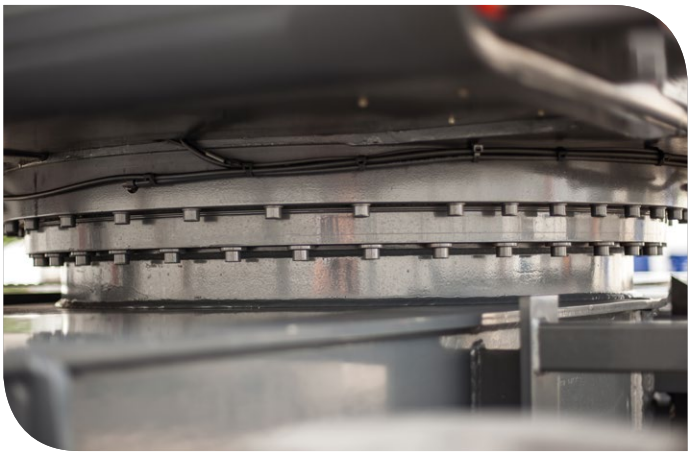

250MH-EN (1) Effective date: 09/2024. Product specifications and prices are subject to change without notice or obligation. The photographs and/or drawings in this document are for illustrative purposes only. Refer to the appropriate Operator's Manual for instructions on the proper use of this equipment. Failure to follow the appropriate Operator's Manual when using our equipment or to otherwise act irresponsibly may result in serious injury or death. The only warranty applicable to our equipment is the standard written warranty applicable to the particular product and sale and Atlas makes no other warranty, express or implied. The only warranty applicable to our equipment is the standard written warranty applicable to the particular product and sale and Atlas makes no other warranty, express or implied. Products and services listed may be trademarks, service marks or trade-names of Atlas GmbH and/or its subsidiaries. All rights are reserved. Atlas® is a registered trademark of Atlas GmbH.
Copyright © 2022 Atlas GmbH.
Ref. no. 6193871

GANDERKESEE FACTORY
Atlas GmbH
Atlasstraße 6
D-27777 Ganderkesee,
Germany

Tel.: +49 (0) 4222 954 0
Fax: +49 (0) 4222 954 220
E-mail: info@atlasgmbh.com
www.atlasgmbh.com

VECHTA FACTORY
Atlas GmbH
Theodor-Heuss-Str. 3
D-49377 Vechta
Germany

T: +49 (0) 4441 954 0
F: +49 (0) 4441 954 299
E-mail: info@atlasgmbh.com
www.atlasgmbh.com

DELMENHORST FACTORY
Atlas GmbH
Stedinger Straße 324
D-27751 Delmenhorst
Germany

T: +49 (0) 4221 49 10
F: +49 (0) 4221 49 14 43
E-mail: info@atlasgmbh.com
www.atlasgmbh.com

ATLAS CRANES UK LTD
NATIONAL SALES & SERVICE FACILITY
Wharfedale Road,
Euroway Trading Est.
Bradford, England BD4 6SL
United Kingdom
T: +44 8444 99 66 88
F: +44 1274 65 37 85
E-mail: atlasuk@atlasgmbh.com
www.atlas-cranes.co.uk
www.atlasgmbh.com

ATLAS
SINCE 1919

Status: 09/2024