ATLAS 1919 - 2019

ATLAS SINCE 1919

FAST. RELIABLE. VERSATILE.

- 31.2 - 33.2 t
- 129 KW (175 HP)
  EU Stage V
- 10.3 - 16.4 m

MADE IN GERMANY

MATERIAL HANDLING MACHINE 300MH

WWW.ATLASGMBH.COM

ATLAS – CONSTRUCTION MACHINERY MANUFACTURER WITH TRADITION

From person to person

When Hinrich Weyhausen started selling construction and agricultural machinery in 1919, he discovered that the machines which his customers actually needed were not available. So he listened to them carefully and went about building the machines himself – exactly according to the requirements of the people who used his machines every day. He carried out pioneering work with a passion under the brand name of Atlas.
His focus was always on the benefit of the machines. And nothing has changed for us in terms of this ideal today.

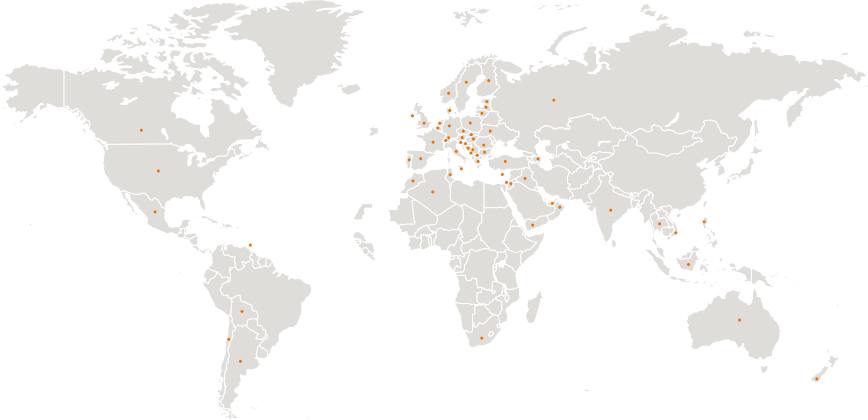

Atlas will make you strong with excellent products and a comprehensive service.

With highly motivated employees, a great deal of commitment and expertise ATLAS GmbH develops successful crane & excavator technologies. Numerous customers, engineers and experts all around the globe have made their contribution. The result is robust equipment to enable you to work more effectively and safely than ever before.

As our know-how grew, so too did our dealer and service network worldwide.
We can hence guarantee – in those days and today too – that we will always be on the spot when you need us.

Atlas manufactures a wide range of equipment for the construction, railroad, material handling and infrastructure industries. You will find more information on Atlas under **www.atlasgmbh.com.**

CONSTRUCTION

TRANSPORT

INFRASTRUCTURE

RECYCLING

CUSTOMER SATISFACTION IS OUR PRIORITY!

WE ARE COMMITTED
to providing our customers with highest quality products and services.

QUALITY STANDARDS AND CUSTOMER SATISFACTION
are measured in terms of service performance, reliability, relevance and timeliness.

OUR COMPANY'S MISSION, GOALS AND OBJECTIVES
are directed towards ongoing process improvement as a basis for strengthening our competitive position and for improving product quality and service standards.

QUALITY STANDARDS AND CUSTOMER SATISFACTION
are measured in terms of product performance and reliability.

PRODUCT RANGE
300MH

EXTENSIVE DEALER NETWORK
EXCELLENT SERVICE
CUSTOMER FOCUSED

ATLAS - The new excavator cabin

The new ATLAS cabin – Best climate, sharp display, digital and direct, more space, best view, extremely quiet, feel good

Clear control panel – Direct selection via keys or digital control via button.....

Most powerful air conditioning system - short airways - large lines - cross sections - silent

Move safely: Standard lateral- and rear view cameras

Best view – especially to the right

ATLAS - The new excavator cabin

Stay communicated - radio with USB connection - mobile phone tray by the left joystick

Lunch break - space for cool box with electrical connection - behind the driver's seat

Easy: Upper carriage lock at the push of a button on T

Bottle holder near the driver

Floor non-slip and
Easy to sweep – storage space for tools and materials

TECHNICAL SPECIFICATION 300MH

ENGINE

Power rating.....129 kW (175 HP)	Bore / cylinder stroke.....101 / 126	**STANDARD BASIC EQUIPMENT:**
RPM.....1800/min	Cooling system.....Water-cooled	• Automatic idling system / Engine stop
Model.....Cummins / QSB 6.7 EU Stage V	Air filter.....Dry air filter	• Diesel pre-filter
Design.....Turbocharger / intercooler	Battery.....2 x 12 V / 100 Ah	• Engine monitoring
Cylinder capacity.....6700 cm^3	Generator.....24 V / 100 A	
Number of cylinders.....6	Starter.....24 V / 3.2 kW	

HYDRAULIC SYSTEM

• AWE 5 system (Load sensing)	• Pipe break protection valves for lifting and articulated cylinders	• Operating modes:
• Load limit controlled high-performance pump	• Proportional grab and grab rotating function	F1 (Fine)
• Fuel-efficient flow-on-demand control	• 3 circuits for additional consumer loads possible	F2 (Eco)
• Sensitive, proportional, independent control	• Max. oil flow.....380 l/min	F3 (Power)
• Primary and secondary protection against overload	• Max. operating pressure.....320 (350) bar	• Accumulator for emergency lowering of the arm system
• Suction valves for all work functions	• Cylinder end position damping	• Load-limit control

SWING ASSEMBLY

• Axial piston motor with priority valve	• Automatically controlled multi-disc brake	• Swing torque.....63.2 kNm
• Planetary transmission	• Two, two-stage valves	• Max. swing speed.....11/min

TRACTION DRIVE AND BRAKES

• Variable displacement motor	• Automotive traveling and cruise control:	• Tractive force.....110 kN
• Power-shift transmission	• Max. speed.....16 km/h	• Gradeability.....33 %
• Double-acting brake valve	• Off-road speed.....5 km/h	• Dual-circuit brake system.....Drum brake
• Travel direction pre-selection via switch in joystick	• Crawling speed.....1 km/h	• Parking brake.....Spring-loaded brake

UNDERCARRIAGE

• Steering axle with automatic oscillating axle locking	• Heavy duty axles	• STD tires: Mitas 12.00-20
• Additional axis locking via left joystick	• Toolbox in undercarriage	

WORKING EQUIPMENT 300MH

DRIVER´S CAB

• Meets latest safety standards (ROPS)	**DRIVER'S SEAT:**	**MONITORING:**
• Extra large entry zone	• Comfort seat with headrest	• Operating data display screen
• Spacious leg room	• Arm rests and lumbar support	• Automatic system for monitoring, warning and storage of data
• Radio preparation with mute function	• Seat adjustable separately from console	• Rear view security camera
• Ready for electric cooling box	• Air suspension	• Right side camera
• Different options for storage, compartment for documents	• Heated	
• Heat-absorbing glass, tinted windows	• Horizontal and vertical suspension	**CLIMATE CONTROL:**
• Excellent all-way visibility	• Lumbar support	• Automatic climate control
• Bottle holder		• Excellent air distribution through optimally arranged nozzles
	CONTROL:	• Refrigerant R134a
	• Ergonomic joysticks with proportional slide control	
	• Slim steering column, height and tilt adjustable	**SOUND LEVELS:**
	• Indicators, controls and operating switches are clearly arranged	• ISO 6396 (L_pA) in driver's cab ..... 71 dB(A)
	• Swing axle lock in the left joystick	• 2000/14 EG (L_wA) ambience level ..... 100 dB(A)

ADDITIONAL EQUIPMENT

• Beacon light	• Alarm-signal while driving	• Electric cooling box
• Gear protection	• Auxiliary heating with water circuit	• Radio with USB
• Cabin Sliding door	• Automatic working brake	• GPS/GSM telemetric system for monitoring of operating data, consumption, position
• Cab protection guard	• Switch hydraulic attachment kit, supports separately at front and rear	• Biodegradable oil
• Cab elevation	• Hydraulic add-on kit, switch supports axially separately	• Refueling pump
• Joystick steering	• Proportional control of supports by slide in joystick	
• 270º camera system	• Automatically controlled and monitored electric central lubrication system for uppercarriage and arm equipment	**Other additional equipment:** See price list
• LED working lights	• Premium Driver seat (Actimo Evolution)	**Special options:** upon request

FILL CAPACITIES

• Fuel tank .....382 litres	• Engine oil.....20 litres	• Hydraulic system.....400 litres
• Cooling system.....42 litres	• Hydraulic tank .....224 litres	• Ad Blue® .....50 litres

OPERATING WEIGHTS

	MONOBLOCK BOOM 6.60 m (C25.5i)	MONOBLOCK BOOM 8.00 m (C25.6i)
	Stick 5.00 m (D25.15i)	**Stick 6.00 m (D25.16i)**
Support dozer blade		
SDB / outriggers		
4 support outriggers	32.8 t	33.2 t

Operating weight with driver, solid rubber tyres, completely filled implement and 1.5 t for attachments and 1.4 t for lift-cab (option)

ATTACHMENTS

• Clamshell grab	• Load hook	• Log grab
• Orange peel grab	• Load lifting magnet	• Sorting grab

WORKING RANGES 300MH

Loading boom 6.60 m (C25.5i) and stick 5.00 m (D25.15i)

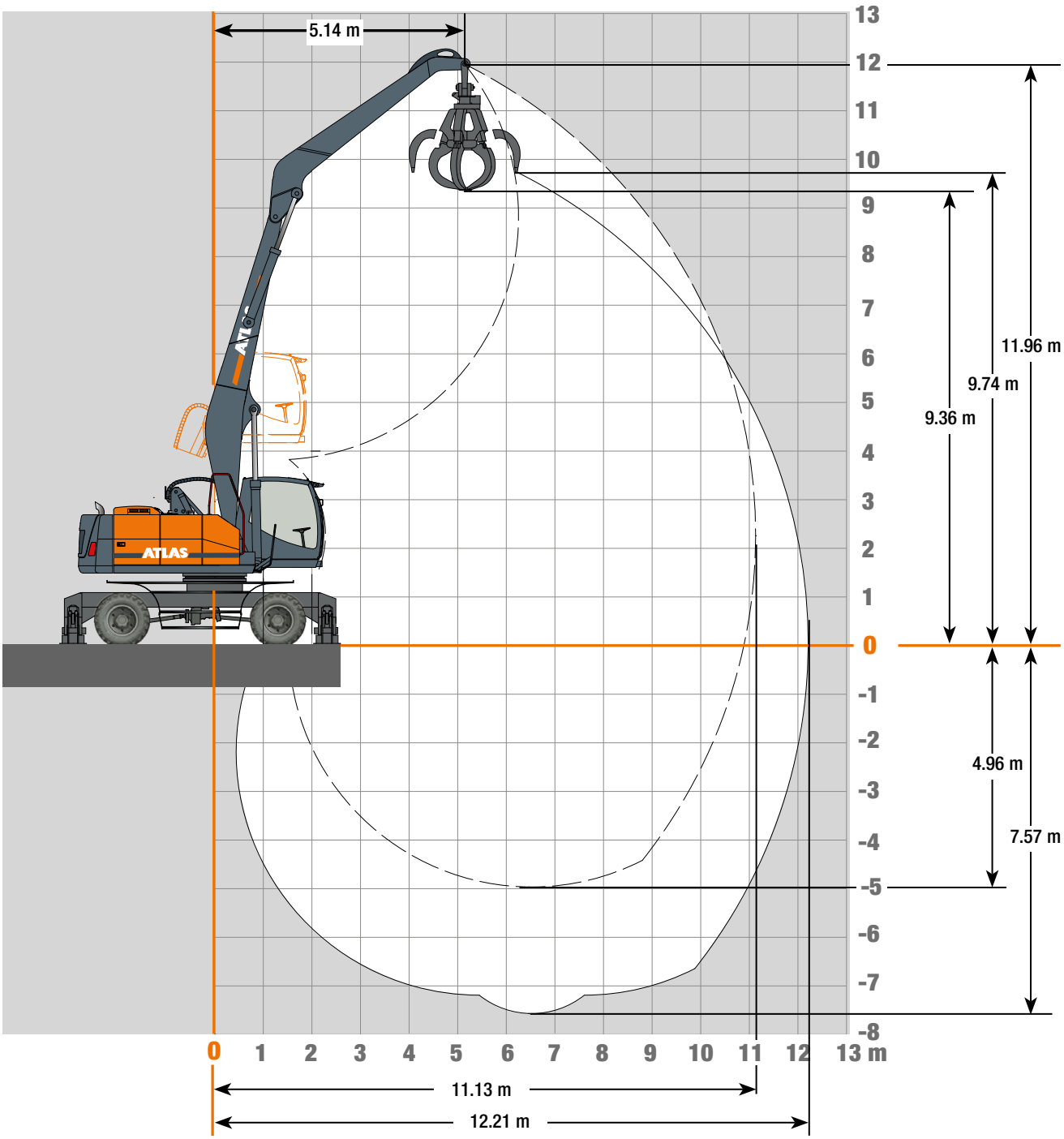

Attachments

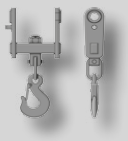

Load hook

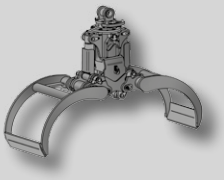

Log grab

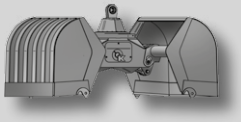

Clamshell grab

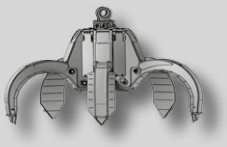

Orange peel grab

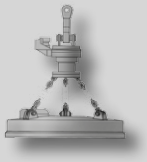

Load lifting magnet

LIFTING CAPACITIES 300MH

Lifting Capacities Loading boom 6.60 m (C25.5i) with stick 5.00 m (D25.15i). Max. reach 12.21 m

HEIGHT	Undercarriage position		3.5 m	4.5 m	5.5 m	6.5 m	7.5 m	8.5 m	9.5 m	10.5 m
+10.5 m	FRONT	outriggers down				5886				
		outriggers up				5886				
	LATERAL	outriggers down				5886				
		outriggers up				5794*				
+ 9.0 m	FRONT	outriggers down				7750	6642	4563		
		outriggers up				7750	6642	4563		
	LATERAL	outriggers down				7750	6642	4563		
		outriggers up				5816*	4615*	3726*		
+ 7.5 m	FRONT	outriggers down				7856	7382	6959	4594	
		outriggers up				7856	7382	6123*	4594	
	LATERAL	outriggers down				7856	7382	6959	4594	
		outriggers up				5840*	4628*	3737*	3070*	
+ 6.0 m	FRONT	outriggers down			9117	8296	7666	7127	6634	
		outriggers up			9117	8296	7447*	6073*	5021*	
	LATERAL	outriggers down			9117	8296	7666	7044*	5832*	
		outriggers up			7383*	5630*	4517*	3683*	3024*	
+ 4.5 m	FRONT	outriggers down		11936	10197	9037	8126	7407	6790	5482
		outriggers up		11936	10197	9037	7211*	5916*	4956*	4214*
	LATERAL	outriggers down		11936	10197	9037	8126	6882*	5769*	4915*
		outriggers up		9533*	6947*	5407*	4314*	3545*	2957*	2490*
+ 3.0 m	FRONT	outriggers down	18623	14,107	11528	9850	8622	7703	6770*	5805*
		outriggers up	18623	14107	11329*	8694*	6937*	5,732*	4843*	4150*
	LATERAL	outriggers down	18623	14107	11528	9850	8111*	6693*	5655*	4851*
		outriggers up	12625*	8618*	6394*	5040*	4077*	3380*	2850*	2428*
+ 1.5 m	FRONT	outriggers down	21166	15773	12546	10446	9008	7810*	6623*	5700*
		outriggers up	21166	15083*	10753*	8243*	6690*	5534*	4708*	4053*
	LATERAL	outriggers down	21166	15773	12546	9729*	7861*	6487*	5515*	4751*
		outriggers up	11066*	7767*	5902*	4670*	3850*	3208*	2731*	2343*
+ 0 m	FRONT	outriggers down	20531	15877	12761	10550	9008	7661*	6524*	5635*
		outriggers up	20531	14401*	10317*	7923*	6435*	5390*	4610*	3990*
	LATERAL	outriggers down	20531	15877	12364*	9397*	7591*	6342*	5417*	4687*
		outriggers up	10329*	7239*	5522*	4397*	3637*	3075*	2639*	2283*
- 1.5 m	FRONT	outriggers down	18071	14651	12022	10112	8583	7375	6288	5229
		outriggers up	18071	14116*	10066*	7804*	6318*	5287*	4522*	3959*
	LATERAL	outriggers down	18071	14651	12022	9287*	7476*	6236*	5323*	4656*
		outriggers up	10156*	7010*	5319*	4267*	3524*	2982*	2565*	2252*
- 3.0 m	FRONT	outriggers down	14462	12285	10401	8800	7510	6391	5188	
		outriggers up	14462	12285	10009*	7664*	6232*	5263*	4528*	
	LATERAL	outriggers down	14462	12285	10401	8800	7382*	6213*	5188	
		outriggers up	10218*	6986*	5266*	4172*	3459*	2956*	2565*	
- 4.5 m	FRONT	outriggers down		8894	7817	6673	5594	4499		
		outriggers up		8894	7817	6673	5594	4499		
	LATERAL	outriggers down		8894	7817	6673	5594	4499		
		outriggers up		7103*	5312*	4217*	3511*	3003*		

The specified max. loading capacities in kilogrammes (kg) include a stability of 25% or are calculated at 87% of the hydraulic lifting power, as per ISO10567. These values are applicable at the tip of the arm with optimum positioning of the corresponding arm system. Weights of attached load carrying accessories (grab, magnet, load hook, etc.) are not included with the load carrying values. *Value limited due to excavator stability.

WORKING RANGES 300MH

Loading boom 8.00 m (C25.6i) and stick 6.00 m (D25.16i)

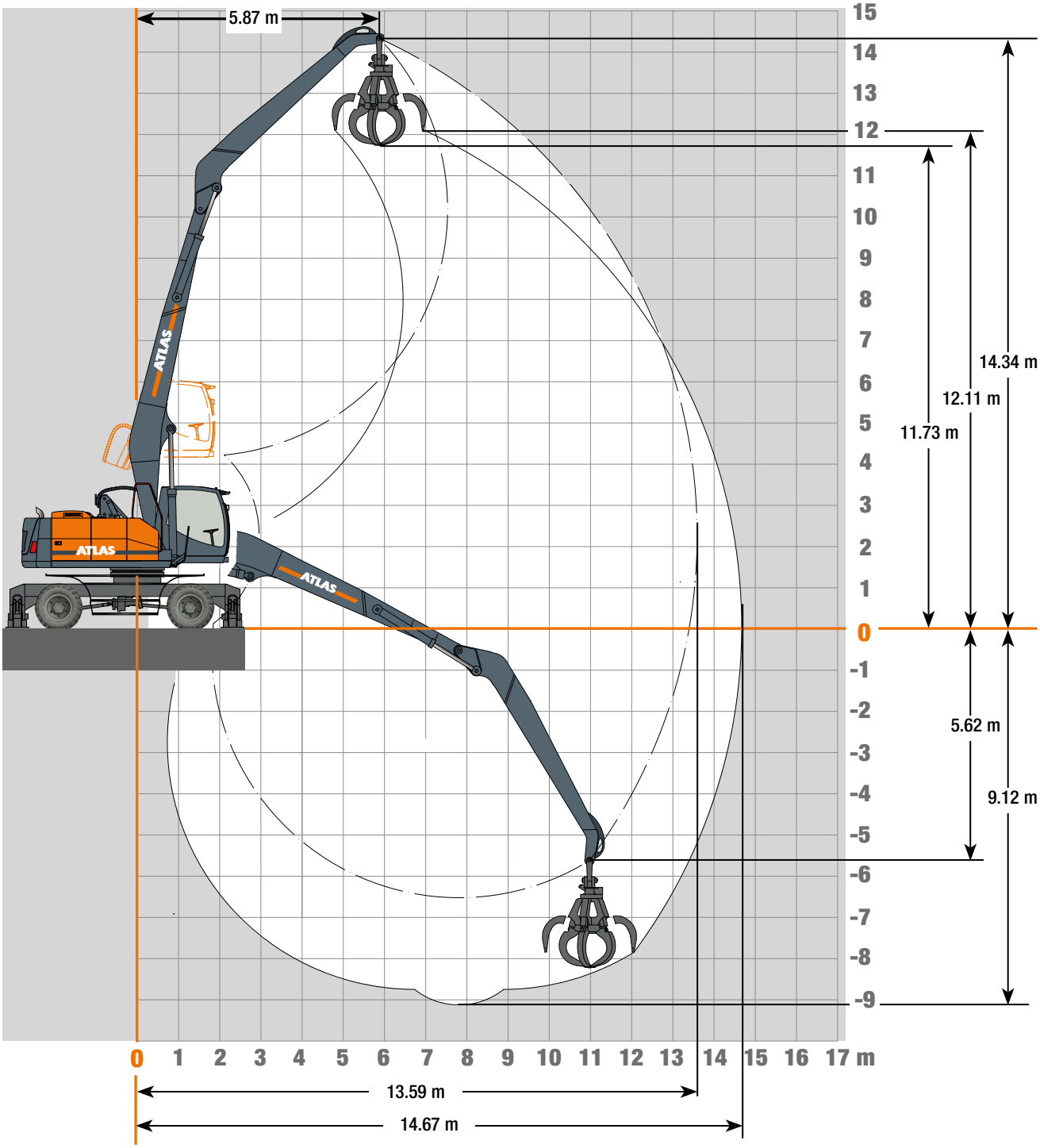

Attachments

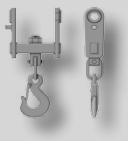

Load hook

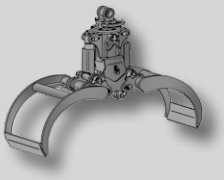

Log grab

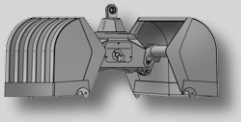

Clamshell grab

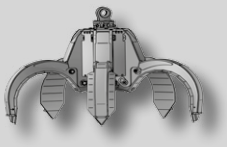

Orange peel grab

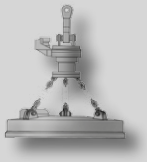

Load lifting magnet

LIFTING CAPACITIES 300MH

Lifting Capacities Loading Boom 8.00 m (C25.6i) with stick 6.00 m (D25.16i). Max reach 14.67 m

HEIGHT	Undercarriage position		4.5 m	5.5 m	6.5 m	7.5 m	8.5 m	9.5 m	10.5 m	11.5 m	12.5 m	13.5 m
+13.5 m	FRONT	outriggers down			4317							
		outriggers up			4317							
	LATERAL	outriggers down			4317							
		outriggers up			4317							
+12.0 m	FRONT	outriggers down				5260	4048					
		outriggers up				5260	4048					
	LATERAL	outriggers down				5260	4048					
		outriggers up				4681*	3746*					
+10.5 m	FRONT	outriggers down				6113	5767	4683	2878			
		outriggers up				6113	5767	4683	2878			
	LATERAL	outriggers down				6113	5767	4683	2878			
		outriggers up				4737*	3802*	3120*	2506*			
+9.0 m	FRONT	outriggers down				6167	5777	5445	4854	2906		
		outriggers up				6167	5777	5143*	4342*	2906		
	LATERAL	outriggers down				6167	5777	5445	4854	2906		
		outriggers up				4785*	3803*	3085*	2557*	2072*		
+7.5 m	FRONT	outriggers down				6377	5925	5548	5201	4571		
		outriggers up				6377	5925	5122*	4269*	3613*		
	LATERAL	outriggers down				6377	5925	5548	4981*	4237*		
		outriggers up				4616*	3698*	3053*	2498*	2062*		
+6.0 m	FRONT	outriggers down			7451	6766	6183	5736	5313	4958	3751	
		outriggers up			7451	6766	5942*	4985*	4193*	3582*	3057*	
	LATERAL	outriggers down			7451	6766	6183	5736	4905*	4209*	3612*	
		outriggers up			5516*	4397*	3523*	2927*	2423*	2026*	1678*	
+4.5 m	FRONT	outriggers down	11283	9554	8222	7287	6521	5946	5458	4935*	4326*	
		outriggers up	11283	9554	8222	7034*	5687*	4794*	4058*	3471*	3019*	
	LATERAL	outriggers down	11283	9554	8222	7287	6521	5616*	4767*	4094*	3576*	
		outriggers up	9169*	6653*	5153*	4085*	3295*	2757*	2299*	1928*	1637*	
+ 3.0 m	FRONT	outriggers down	13262	10715	8963	7758	6879	6164	5586*	4822*	4235*	2759
		outriggers up	13262	10715	8253*	6599*	5467*	4583*	3916*	3363*	2935*	2569*
	LATERAL	outriggers down	13262	10715	8963	7758	6437*	5400*	4623*	3983*	3489*	2759
		outriggers up	7815*	5902*	4597*	3715*	3080*	2567*	2167*	1828*	1561*	1329*
+1.5 m	FRONT	outriggers down	14508	11465	9564	8153	7107	6322	5409*	4727*	4168*	2999
		outriggers up	13788*	9891*	7736*	6239*	5157*	4397*	3752*	3268*	2868*	2527*
	LATERAL	outriggers down	14508	11465	9235*	7413*	6116*	5213*	4454*	3888*	3422*	2999
		outriggers up	6679*	5119*	4133*	3384*	2808*	2391*	2020*	1736*	1496*	1289*
+0 m	FRONT	outriggers down	14404	11644	9658	8262	7128	6113*	5285*	4617*	4103*	
		outriggers up	13004*	9385*	7265*	5925*	4907*	4197*	3630*	3166*	2805*	
	LATERAL	outriggers down	14404	11411*	8743*	7091*	5856*	5004*	4331*	3783*	3359*	
		outriggers up	6032*	4655*	3735*	3102*	2591*	2216*	1905*	1644*	1437*	
-1.5 m	FRONT	outriggers down	13283	11069	9356	7992	6928	5979*	5187*	4559*	4060*	
		outriggers up	12651*	9094*	7048*	5700*	4756*	4071*	3537*	3108*	2764*	
	LATERAL	outriggers down	13283	11069	8523*	6856*	5703*	4875*	4236*	3725*	3317*	
		outriggers up	5773*	4408*	3535*	2912*	2451*	2101*	1819*	1587*	1399*	
-3.0 m	FRONT	outriggers down	11545	9843	8487	7323	6,389	5626	4,884	4179	3417	
		outriggers up	11545	8921*	6928*	5578*	4664*	4017*	3493*	3071*	2756*	
	LATERAL	outriggers down	11545	9843	8399*	6726*	5607*	4823*	4192*	3686*	3308*	
		outriggers up	5734*	4293*	3432*	2811*	2370*	2047*	1777*	1557*	1394*	
-4.5 m	FRONT	outriggers down	9285	8161	7191	6303	5496	4777	4048	3265		
		outriggers up	9285	8161	6894*	5567*	4685*	4009*	3501*	3111*		
	LATERAL	outriggers down	9285	8161	7191	6303	5496	4777	4048	3265		
		outriggers up	5857*	4328*	3420*	2803*	2376*	2040*	1784*	1590*		
-6.0 m	FRONT	outriggers down		5980	5388	4761	4098	3430	2695			
		outriggers up		5980	5388	4761	4098	3430	2695			
	LATERAL	outriggers down		5980	5388	4761	4098	3430	2695			
		outriggers up		4469*	3538*	2884*	2425*	2101*	1859*			

The specified max. loading capacities in kilogrammes (kg) include a stability of 25% or are calculated at 87% of the hydraulic lifting power, as per ISO10567. These values are applicable at the tip of the arm with optimum positioning of the corresponding arm system. Weights of attached load carrying accessories (grab, magnet, load hook, etc.) are not included with the load carrying values. *Value limited due to excavator stability.

WORKING RANGES 300MH

Loading boom 8.00 m (C25.6i) and stick 6.00 m (D25.16is)

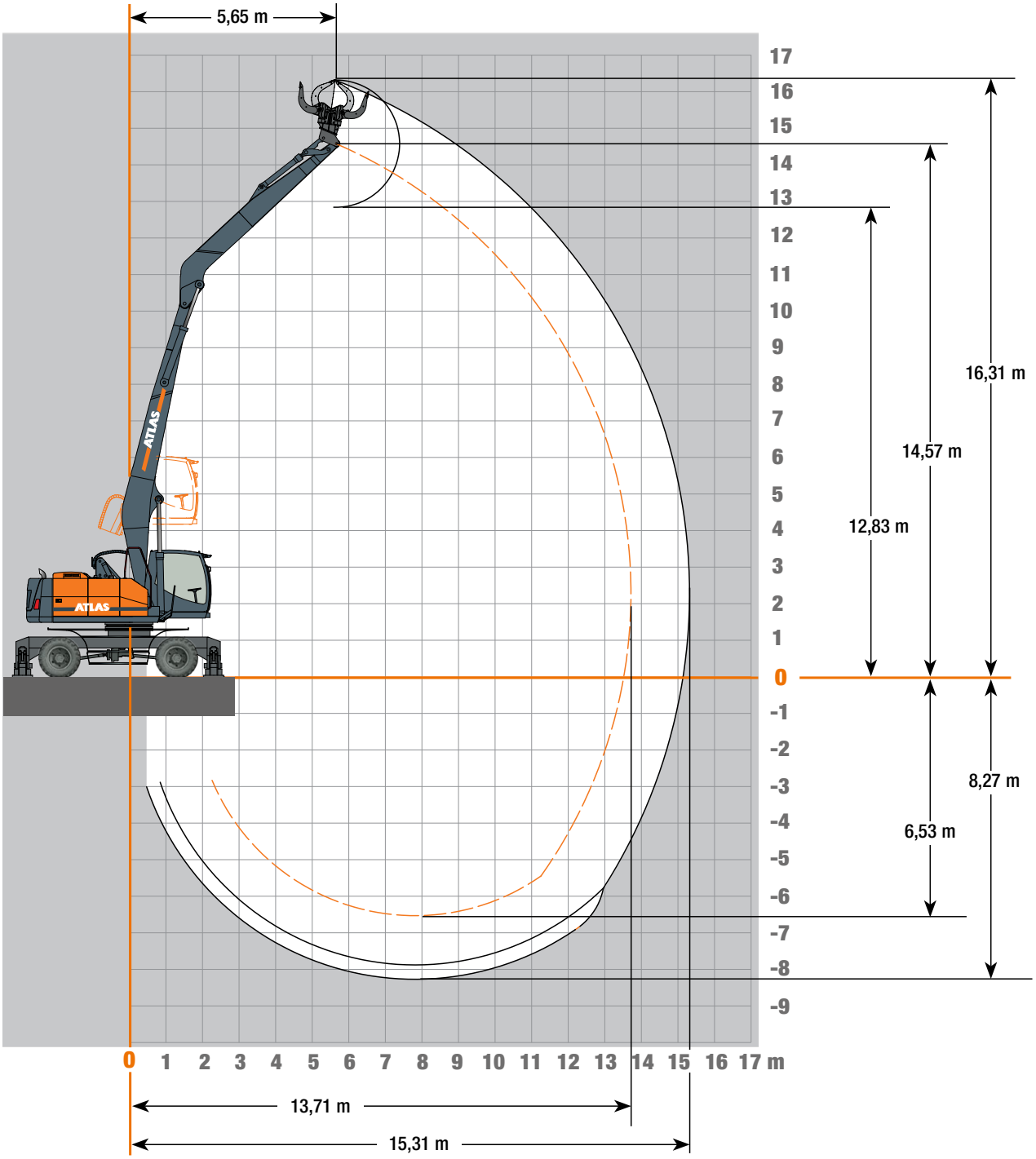

Attachments

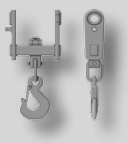

Load hook

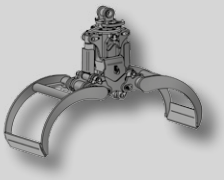

Log grab

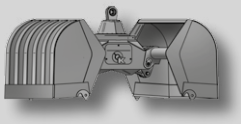

Clamshell grab

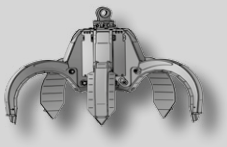

Orange peel grab

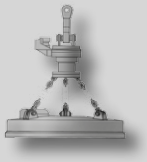

Load lifting magnet

LIFTING CAPACITIES 300MH

Lifting Capacities Loading Boom 8.00 m (C25.6i) with stick 6.00 m (D25.16is). Max reach 15.31 m

HEIGHT	Undercarriage position		4.5 m	5.5 m	6.5 m	7.5 m	8.5 m	9.5 m	10.5 m	11.5 m	12.5 m	13.5 m
+13.5 m	FRONT	outriggers down			4777	3245						
		outriggers up			4777	3245						
	LATERAL	outriggers down			4777	3245						
		outriggers up			4777	3245						
+12.0 m	FRONT	outriggers down				5729	4447					
		outriggers up				5729	4447					
	LATERAL	outriggers down				5729	4447					
		outriggers up				4759*	3769*					
+10.5 m	FRONT	outriggers down				6136	5814	5035	3405			
		outriggers up				6136	5814	5035	3405			
	LATERAL	outriggers down				6136	5814	5035	3405			
		outriggers up				4756*	3879*	3138*	2546*			
+9.0 m	FRONT	outriggers down				6191	5791	5482	5189	3418		
		outriggers up				6191	5791	5226*	4355*	3418		
	LATERAL	outriggers down				6191	5791	5482	5071*	3418		
		outriggers up				4805*	3816*	3146*	2571*	2109*		
+7.5 m	FRONT	outriggers down				6405	5932	5569	5211	4926	2837	
		outriggers up				6405	5932	5141*	4278*	3664*	2837	
	LATERAL	outriggers down				6405	5932	5569	4989*	4292*	2837	
		outriggers up				4640*	3706*	3070*	2509*	2101*	1731*	
+6.0 m	FRONT	outriggers down			7493	6798	6212	5738	5333	4975	4253	
		outriggers up			7493	6798	6027*	4985*	4210*	3597*	3095*	
	LATERAL	outriggers down			7493	6798	6212	5738	4923*	4224*	3653*	
		outriggers up			5620*	4422*	3583*	2932*	2438*	2040*	1708*	
+4.5 m	FRONT	outriggers down	11366	9509	8194	7269	6545	5969	5478	4977*	4330*	2523
		outriggers up	11366	9509	8194	7009*	5756*	4816*	4076*	3506*	3026*	2523
	LATERAL	outriggers down	11366	9509	8194	7269	6545	5641*	4787*	4132*	3582*	2523
		outriggers up	9257*	6687*	5134*	4075*	3343*	2773*	2313*	1956*	1645*	1382*
+ 3.0 m	FRONT	outriggers down	13343	10652	8993	7781	6870	6182	5607	4840*	4237*	3305
		outriggers up	13343	10652	8311*	6637*	5449*	4605*	3934*	3378*	2939*	2593*
	LATERAL	outriggers down	13343	10652	8993	7781	6415*	5424*	4642*	4000*	3493*	3095*
		outriggers up	7889*	5858*	4625*	3736*	3072*	2581*	2180*	1840*	1568*	1349*
+1.5 m	FRONT	outriggers down	14405	11531	9513	8117	7136	6305*	5432*	4721*	4168*	3401
		outriggers up	13643*	9976*	7682*	6204*	5191*	4376*	3768*	3266*	2870*	2533*
	LATERAL	outriggers down	14405	11531	9170*	7371*	6155*	5189*	4473*	3885*	3423*	3032*
		outriggers up	6606*	5149*	4103*	3365*	2831*	2377*	2032*	1738*	1500*	1296*
+0 m	FRONT	outriggers down	14257	11571	9672	8223	7155	6140*	5270*	4636*	4101*	3165
		outriggers up	12785*	9302*	7289*	5888*	4930*	4215*	3621*	3180*	2806*	2508*
	LATERAL	outriggers down	14257	11313*	8772*	7048*	5885*	5027*	4320*	3799*	3358*	3009*
		outriggers up	5937*	4607*	3746*	3081*	2602*	2226*	1902*	1654*	1440*	1269*
-1.5 m	FRONT	outriggers down	13196	10999	9302	7952	6953	6006*	5171*	4550*	4057*	
		outriggers up	12533*	9015*	6993*	5663*	4777*	4088*	3527*	3103*	2764*	
	LATERAL	outriggers down	13196	10999	8460*	6812*	5730*	4897*	4223*	3719*	3315*	
		outriggers up	5707*	4360*	3502*	2890*	2459*	2109*	1815*	1587*	1402*	
-3.0 m	FRONT	outriggers down	11463	9778	8500	7349	6411	5606	4872	4195	3432	
		outriggers up	11463	8843*	6886*	5604*	4684*	3999*	3482*	3084*	2765*	
	LATERAL	outriggers down	11463	9778	8350*	6761*	5633*	4802*	4179*	3701*	3317*	
		outriggers up	5667*	4246*	3405*	2818*	2377*	2037*	1772*	1566*	1401*	
-4.5 m	FRONT	outriggers down	9209	8101	7145	6324	5470	4759	4038	3279		
		outriggers up	9209	8101	6841*	5593*	4659*	3991*	3491*	3116*		
	LATERAL	outriggers down	9209	8101	7145	6324	5470	4759	4038	3279		
		outriggers up	5789*	4281*	3387*	2810*	2360*	2030*	1779*	1593*		
-6.0 m	FRONT	outriggers down		5928	5348	4732	4111	3442	2690			
		outriggers up		5928	5348	4732	4111	3442	2690			
	LATERAL	outriggers down		5928	5348	4732	4111	3442	2690			
		outriggers up		4422*	3480*	2861*	2434*	2097*	1868*			

The specified max. loading capacities in kilogrammes (kg) include a stability of 25% or are calculated at 87% of the hydraulic lifting power, as per ISO10567. These values are applicable at the tip of the arm with optimum positioning of the corresponding arm system. Weights of attached load carrying accessories (grab, magnet, load hook, etc.) are not included with the load carrying values. *Value limited due to excavator stability.

DIMENSION 300MH

300MH Transport position

Standard-Cab

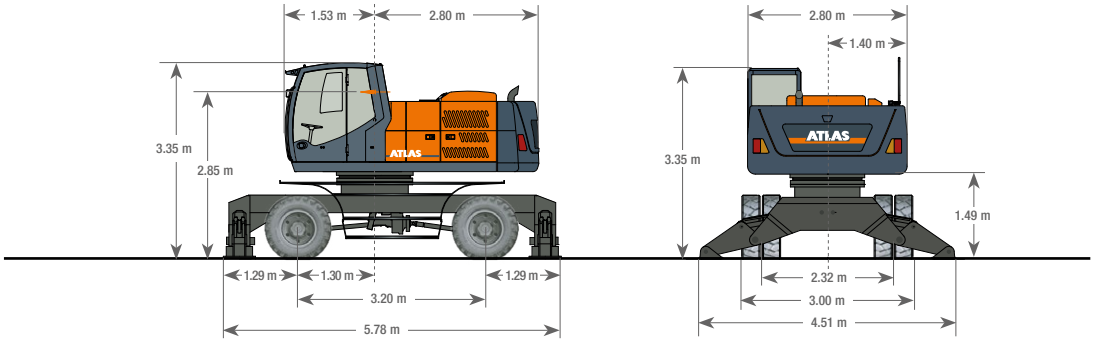

Lift-Cab

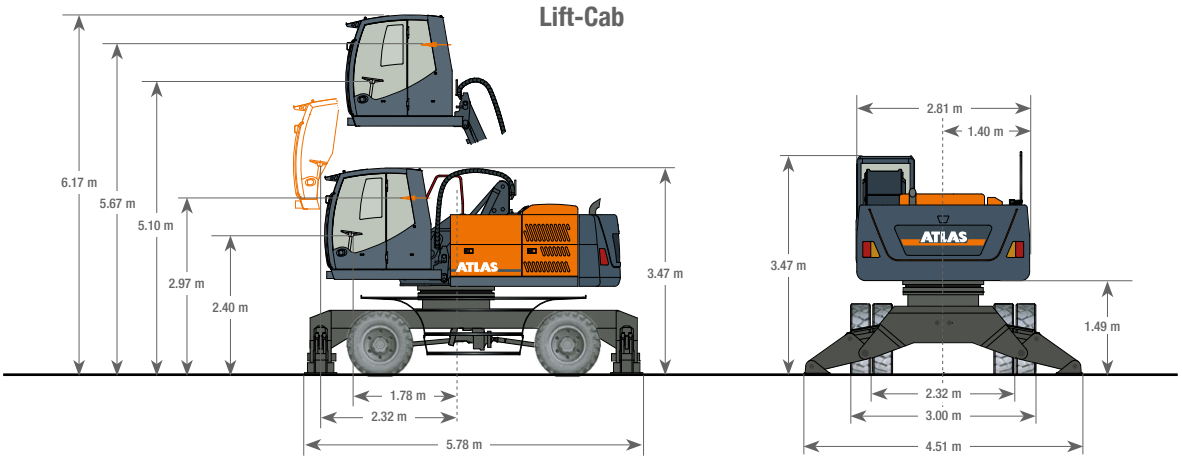

Basic Lift

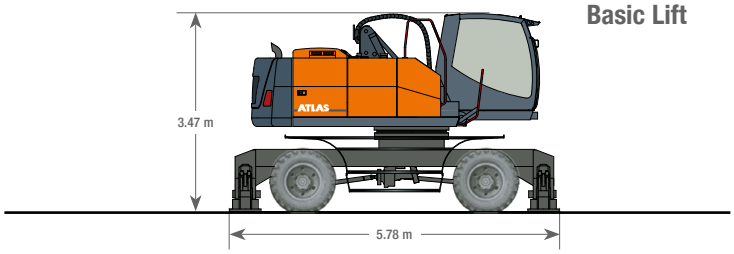

A84.32 Lift C25.6l, D25.16l

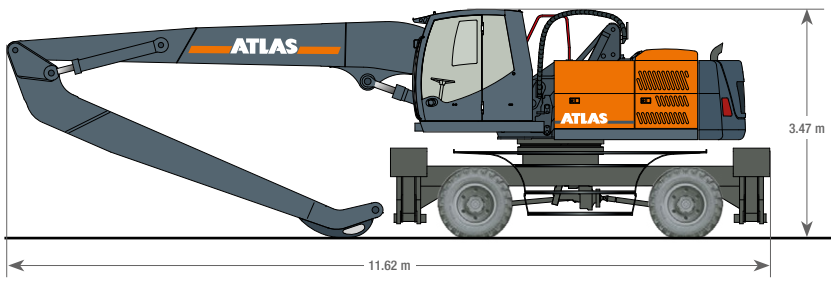

Cab elevation 1,20 m

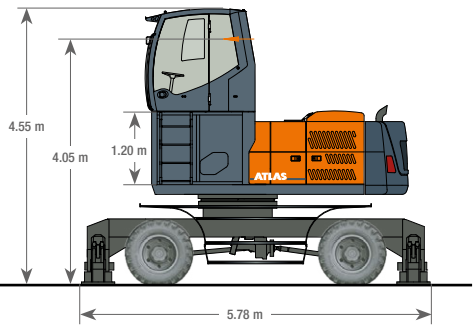

Further cabin versions on demand.

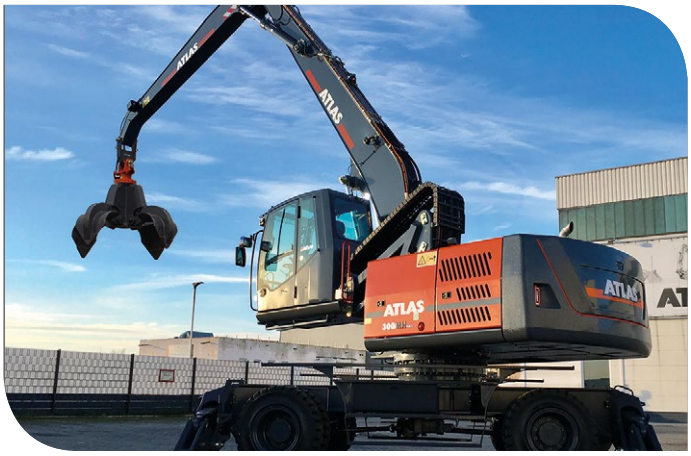

300MH-EN (1) Effective date: 09/2024. Product specifications and prices are subject to change without notice or obligation. The photographs and/or drawings in this document are for illustrative purposes only. Refer to the appropriate Operator's Manual for instructions on the proper use of this equipment. Failure to follow the appropriate Operator's Manual when using our equipment or to otherwise act irresponsibly may result in serious injury or death. The only warranty applicable to our equipment is the standard written warranty applicable to the particular product and sale and Atlas makes no other warranty, express or implied. The only warranty applicable to our equipment is the standard written warranty applicable to the particular product and sale and Atlas makes no other warranty, express or implied. Products and services listed may be trademarks, service marks or trade-names of Atlas GmbH and/or its subsidiaries. All rights are reserved. Atlas® is a registered trademark of Atlas GmbH. Copyright © 2024 Atlas GmbH.

Ref. no. 6203428

GANDERKESEE FACTORY
Atlas GmbH
Atlasstraße 6
D-27777 Ganderkesee,
Germany

Tel.: +49 (0) 4222 954 0
Fax: +49 (0) 4222 954 220
E-mail: info@atlasgmbh.com
www.atlasgmbh.com

VECHTA FACTORY
Atlas GmbH
Theodor-Heuss-Str. 3
D-49377 Vechta
Germany

T: +49 (0) 4441 954 0
F: +49 (0) 4441 954 299
E-mail: info@atlasgmbh.com
www.atlasgmbh.com

DELMENHORST FACTORY
Atlas GmbH
Stedinger Straße 324
D-27751 Delmenhorst
Germany

T: +49 (0) 4221 49 10
F: +49 (0) 4221 49 14 43
E-mail: info@atlasgmbh.com
www.atlasgmbh.com

ATLAS CRANES UK LTD
NATIONAL SALES & SERVICE FACILITY
Wharfedale Road,
Euroway Trading Est.
Bradford, England BD4 6SL
United Kingdom
T: +44 8444 99 66 88
F: +44 1274 65 37 85
E-mail: atlasuk@atlasgmbh.com
www.atlas-cranes.co.uk
www.atlasgmbh.com

ATLAS
SINCE 1919

Status: 09/2024