ATLAS 1919 - 2019

ATLAS SINCE 1919

ROBUST. PRECISE. EFFICIENT.

- max. 42 t
- 180 kW (245 HP) EU Stage V
- 0.80 - 1.60 m^3

MADE IN GERMANY

CRAWLER EXCAVATOR 340LC

WWW.ATLASGMBH.COM

ATLAS – CONSTRUCTION MACHINERY MANUFACTURER WITH TRADITION

From person to person

When Hinrich Weyhausen started selling construction and agricultural machinery in 1919, he discovered that the machines which his customers actually needed were not available. So he listened to them carefully and went about building the machines himself – exactly according to the requirements of the people who used his machines every day. He carried out pioneering work with a passion under the brand name of Atlas.
His focus was always on the benefit of the machines. And nothing has changed for us in terms of this ideal today.

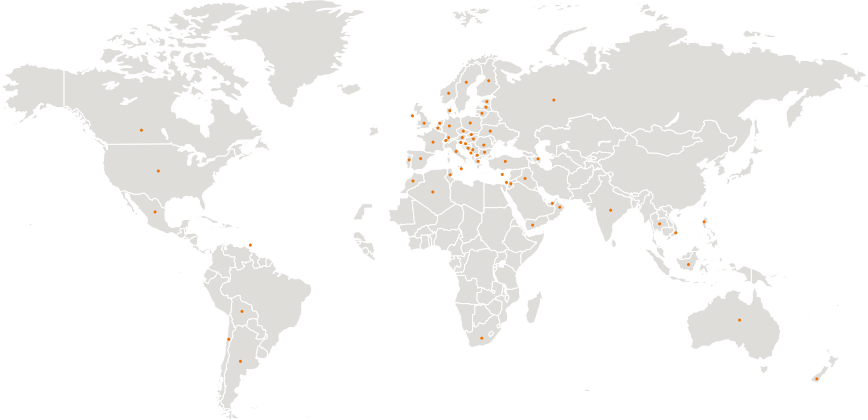

Atlas will make you strong with excellent products and a comprehensive service.

With highly motivated employees, a great deal of commitment and expertise ATLAS GmbH develops successful crane & excavator technologies. Numerous customers, engineers and experts all around the globe have made their contribution. The result is robust equipment to enable you to work more effectively and safely than ever before.

As our know-how grew, so too did our dealer and service network worldwide.
We can hence guarantee – in those days and today too – that we will always be on the spot when you need us.

Atlas manufactures a wide range of equipment for the construction, railroad, material handling and infrastructure industries. You will find more information on Atlas under **www.atlasgmbh.com.**

CONSTRUCTION

TRANSPORT

INFRASTRUCTURE

RECYCLING

CUSTOMER SATISFACTION IS OUR PRIORITY!

WE ARE COMMITTED
to providing our customers with highest quality products and services.

QUALITY STANDARDS AND CUSTOMER SATISFACTION
are measured in terms of service performance, reliability, relevance and timeliness.

OUR COMPANY'S MISSION, GOALS AND OBJECTIVES
are directed towards ongoing process improvement as a basis for strengthening our competitive position and for improving product quality and service standards.

QUALITY STANDARDS AND CUSTOMER SATISFACTION
are measured in terms of product performance and reliability.

PRODUCT RANGE
340LC

EXTENSIVE DEALER NETWORK
EXCELLENT SERVICE
CUSTOMER FOCUSED

ATLAS - The new excavator cabin

The new ATLAS cabin – Best climate, sharp display, digital and direct, more space, best view, extremely quiet, feel good

Clear control panel – Direct selection via keys or digital control via button.....

Move safely: Standard lateral- and rear view cameras

Most powerful air conditioning system - short airways - large lines - cross sections - silent

Best view – especially to the right

ATLAS - The new excavator cabin

Stay communicated - radio with USB connection - mobile phone tray by the left joystick

Lunch break - space for cool box with electrical connection - behind the driver's seat

Easy: Upper carriage lock at the push of a button on T

Bottle holder near the driver

Floor non-slip and
Easy to sweep – storage space for tools and materials

TECHNICAL SPECIFICATION 340LC

ENGINE

Power rating.....180 kW (245 HP)	Bore / cylinder stroke.....101 / 126	**STANDARD BASIC EQUIPMENT:**
RPM.....1800/min	Cooling system.....Water-cooled	• Automatic idling system / Engine stop
Model.....Deutz TCD 6.1 L6 EU Stage V	Air filter.....Dry air filter	• Cold start assistance
Design.....Turbocharger / intercooler	Battery.....2 x 12 V / 143 Ah	• Diesel pre-filter
Cylinder capacity.....6100 cm^3	Generator.....24 V / 70 A	• Engine monitoring
Number of cylinders.....6	Starter.....24 V / 3.2 kW	

HYDRAULIC SYSTEM

• AWE 5 system (Load sensing)	• Pipe break protection valves for lifting and articulated cylinders	• Operating modes:
• Load limit controlled high-performance pump	• Proportional grab and grab rotating function	F1 (Fine)
• Fuel-efficient flow-on-demand control	• 3 circuits for additional consumer loads possible	F2 (Eco)
• Sensitive, proportional, independent control	• Max. oil flow.....660 l/min	F3 (Power)
• Primary and secondary protection against overload	• Max. operating pressure.....380 bar	• Accumulator for emergency lowering of the arm system
• Suction valves for all work functions	• Cylinder end position damping	• Load-limit control

SWING ASSEMBLY

• Axial piston motor with priority valve	• Automatically controlled multi-disc brake	• Swing torque.....93.4 kNm
• Planetary transmission	• Two, two-stage valves	• Max. swing speed.....8.7/min

TRACTION DRIVE AND BRAKES

• Variable displacement motor	• Speed:	• Two automatic drive positions
• Double-acting brake valve	Stage 1.....max. 0-2.6 km/h	• Tractive force.....110* kN
• Hydraulic, service-free multidisc brakes	Stage 2.....max. 0-5.3 km/h	• Gradeability.....70 %

UNDERCARRIAGE

• Complete heavy duty undercarriage in X-design	• Automatic hydraulic controlled brakes and brake valve	• Chain tension adjustable via grease cylinder, pre-tension by elastomer tensioner
	• Integrated chain guides on the guide wheels as well as chain guides middle side aisle	• Lubricated sealed chain drive quality B4HD

DRIVER´S CAB

• Meets latest safety standards (ROPS)	**DRIVER'S SEAT:**	**MONITORING:**
• Extra large entry zone	• Comfort seat with headrest	• Operating data display screen
• Spacious leg room	• Arm rests and lumbar support	• Automatic system for monitoring, warning and storage of data
• Radio preparation with mute function	• Seat adjustable separately from console	• Rear view security camera
• Ready for electric cooling box	• Air suspension	• Right side camera
• Different options for storage, compartment for documents	• Heated	
• Heat-absorbing glass, tinted windows	• Horizontal and vertical suspension	**CLIMATE CONTROL:**
• Excellent all-way visibility	• Lumbar support	• Automatic climate control
• Bottle holder		• Excellent air distribution through optimally arranged nozzles
	CONTROL:	• Refrigerant R134a
	• Ergonomic joysticks with proportional slide control	
	• Indicators, controls and operating switches are clearly arranged	**SOUND LEVELS:**
		• ISO 6396 (L_pA) in driver's cab.....69 dB(A)
		• 2000/14 EG (L_wA) ambience level.....102 dB(A)

WORKING EQUIPMENT 340LC

BASIC UNIT

A 84.81	ATLAS hydraulic crawler excavator 340LC with continuously rotating upper carriage and two lifting cylinders, but without main boom, with ATLAS cabin 935 with sound absorption, heating by utilizing the engine cooling water heat and air conditioning, swivel radius 3300 mm. Counterweight 6.4 t, track 2.60 m, track-chain 600 mm wide.

DRIVE OPTION

4562416	LC-track chain undercarriage with 3400 mm track, length of all 4800 mm, D6C Quality

ADDITIONAL AND SPECIAL DESIGNS

B 84.81	Pipe break protection valves for lifting cylinders
B 84.20	Special counter weight 8200 kg, swing radius 3400 mm

BOOM VARIANTS

C 84.3 M	Monoblock boom with two lifting cylinders, one stick cylinder (length 5570 mm)
C 84.5 M	Monoblock boom with two lifting cylinders, one stick cylinder, bucket cylinder (length 6500 mm)
C 84.41	Base arm with one operating cylinder for C 84.46
C 84.46	Boom, with stick cylinder, suitable for base arm C 84.41 (length 5300 mm)
C 84.5 i	Monoblock boom for material handling with two lifting cylinders, with a length of 8700 mm (for crawler- excavator with 3400 mm track)

STICK

D 84.2	Stick suitable for monoblock boom, (length 2300 mm)
D 84.3	Stick suitable for monoblock boom, (length 2800 mm)
D 84.5	Stick suitable for monoblock boom, (length 3500 mm)
D 84.31	Stick suitable for foldable boom, (length 3500 mm)
D 84.51	Stick suitable for foldable boom, (length 4500 mm)
D 84.55	Stick suitable for foldable boom, - F63.1 control lever required! (length 6400 mm)
D 84.16 i	Stick, suitable for Monoblock C 84.5 i und C 84.6 i (length 6900 mm)
D 84.17 i	Stick, suitable for Monoblock C 84.5 i and C 84.7 i (length 7750 mm)

BUCKET TILT CYLINDER

F 84.1	Bucket tilt cylinder, with bucket linkage
F 63.1	Bucket tilt cylinder with bucket linkage for D 84.55

ATTACHMENTS

		Capacity (SAE)	Cutting width
F 748	Bucket	1.26 m^3	1300 mm
F 718/HD	Bucket	1.50 m^3	1500 mm
G 83.86	Trenching bucket	1.60 m^3	2000 mm
E 851	Orange peel grab	0.80 m^3	half closed

ADDITIONAL EQUIPMENT

• Refueling pump	• LED working lights	• Premium Driver seat (Actimo Evolution)
• Beacon light	• Alarm-signal while driving	• Electric cooling box
• Cabin Sliding door	• Auxiliary heating with water circuit	• Radio with USB
• Cab protection guard	• Automatic working brake	• PS/GSM telemetric system for monitoring of operating data, consumption, position
• Cab elevation	• Automatically controlled and monitored electric central lubrication system for uppercarriage and arm equipment	**Other additional equipment:** See price list
• 270º camera system	• Biodegradable oil	**Special options:** upon request

FILL CAPACITIES

• Fuel tank.....425 Liter	• Engine oil.....21 Liter	• Hydraulic system.....550 Liter
• Cooling system.....48 Liter	• Hydraulic tank.....505 Liter	• Ad Blue®.....32 Liter

WORKING RANGES 340LC

Adjustable boom 2.1 m / 5.3 m (C84.41 / C84.46) with Stick 4.54 m (D84.51)

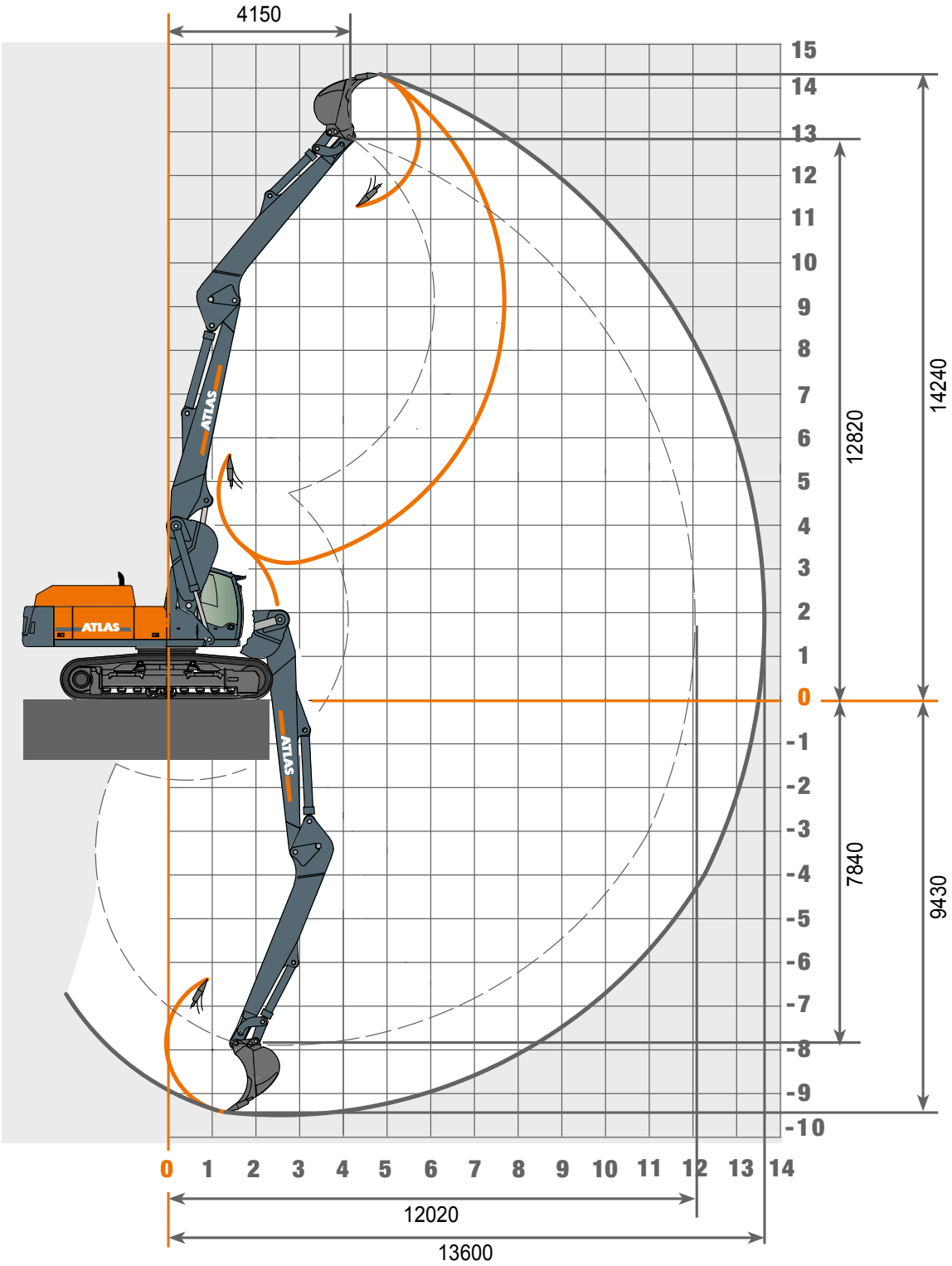

LIFTING CAPACITIES 340LC

	6.5 m		7.0 m		7.5 m		8.0 m		8.5 m		9.0 m		9.5 m		10.0 m		10.5 m		11.0 m		11.5 m	
HEIGHTS	LENGTHS	LATERAL	LENGTHS	LATERAL	LENGTHS	LATERAL	LENGTHS	LATERAL	LENGTHS	LATERAL	LENGTHS	LATERAL	LENGTHS	LATERAL	LENGTHS	LATERAL	LENGTHS	LATERAL	LENGTHS	LATERAL	LENGTHS	LATERAL
Adjustable boom 2.1 m / 5.3 m (C84.41 / C84.46) with Stick 4.54 m (D84.51) Max. Reach 13.60 m																						
+ 10.5 m					4980	4980	3442	3442														
+ 9.0 m							6138	6138	5562	5562	4562	4562										
+ 7.5 m							6512	6512	6376	-5974	6258	-5493	5636	-5018	4525	4525						
+ 6.0 m					7063	-7054	6830	-6441	6623	-5912	6440	-5448	6279	-5039	6079	-4647	5192	-4222	3412	3412		
+ 4.5 m	8529	-8382	8068	-7569	7674	-6890	7333	6311	7035	-5807	6736	-5372	6479	-4984	6230	-4643	6024	-4255	5323	-3876	3236	3236
+ 3.0 m	9580	-8120	8931	7361	8386	-6725	7842	-6177	7453	-5704	7054	-5288	6731	-4923	6468	-4602	-6172	-4230	-5772	-3859	4648	-3523
+ 1.5 m	10523	-7919	9642	-7205	8952	-6594	8354	-6071	7837	-5618	7423	5227	-6989	-4881	-6528	4564	-6121	-4156	-5722	-3798	5217	-3475
+ 0 m	11118	-7829	10198	-7123	9419	-6528	8687	-6025	-8016	5591	-7439	-5214	-6936	-4838	-6496	-4434	-6107	-4046	-5638	-3706	4799	-3407
- 1.5 m	11251	-7817	-10311	-7092	-9419	-6477	-8652	-5947	-8001	-5486	-7440	-5080	6954	-4688	-6496	-4278	-5988	-3922	-5558	-3610		
- 3.0 m	11295	-7619	10361	-6916	9473	-6323	-8721	-5815	-8083	-5374	-7530	-4935	-6899	-4503	-6360	-4135	-5911	-3826				
-4.5 m	11459	-7536	10534	-6845	9681	-6267	-8850	-5708	-8044	-5191	-7373	-4754	5999	-4390								
-6.0 m	11838	-7508	-10685	-6744	9548	-6107																
-7.5 m																						

The specified max. loading capacities in kilogrammes include a stability of 25% or are calculated at 87% of the hydraulic lifting power, as per ISO10567.
These values are applicable at the tip of the arm with optimum positioning of the corresponding arm system. * Value limited due to hydraulics.

WORKING RANGES 340LC

Monoblock boom C84.5M, lenght 6500 mm

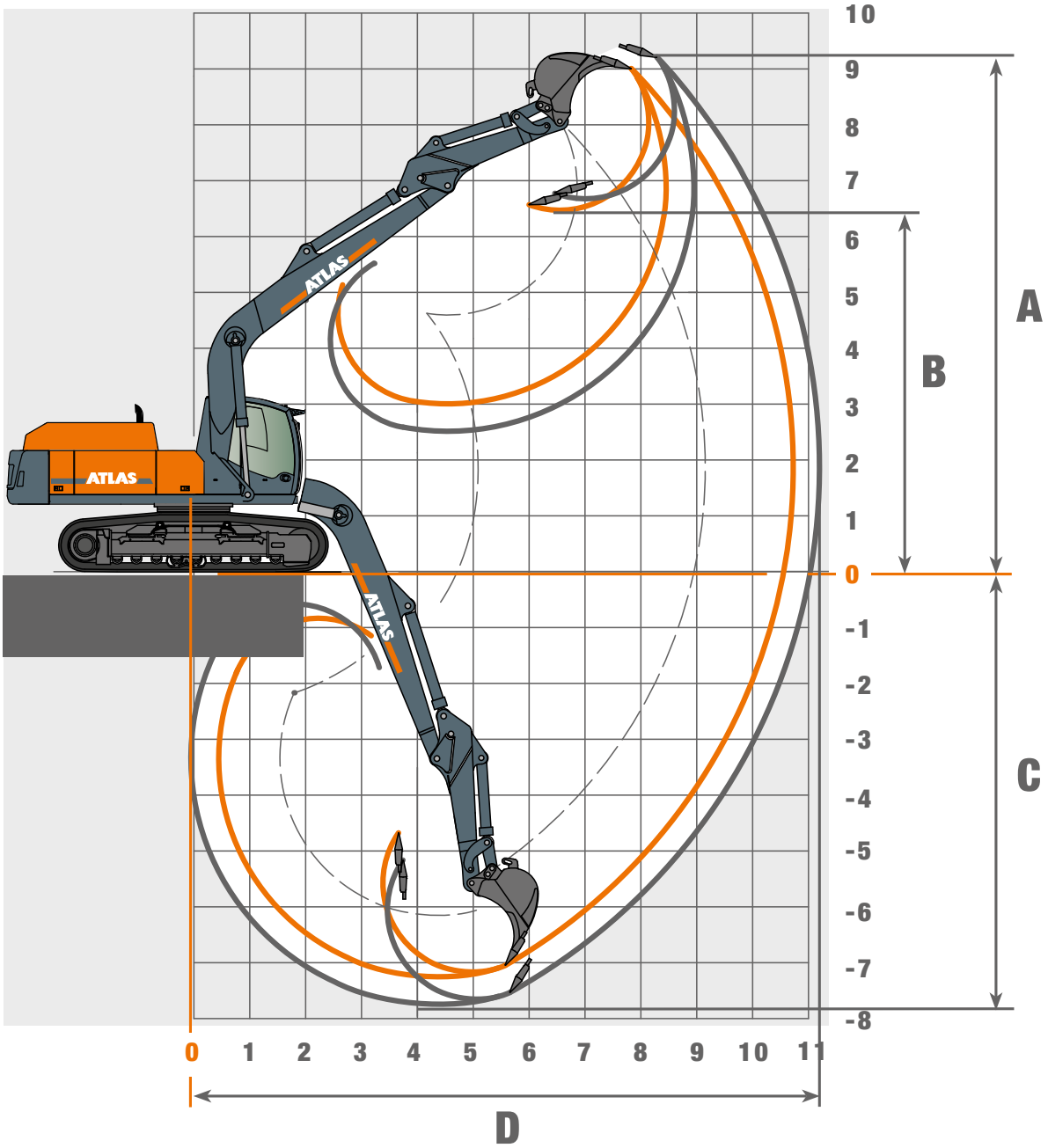

Stick D 84.2 - Length 2300 mm			
Equipment: A 84.81, C 84.5 M, D 84.2, F 849			
			Dipper
A	Max. lifting height	mm	9010
B	Max. dump height	mm	6450
C	Max. Digging depth	mm	7245
D	Max. reach	mm	10730
	Max. reach over ground level	mm	10530
	Breakout force	kN	175,7
	Tear-out force	kN	134

Stick D 84.3 - Length 2800 mm			
Equipment: A 84.81, C 84.5 M, D 84.3, F 849			
			Dipper
A	Max. lifting height	mm	9210
B	Max. dump height	mm	-
C	Max. Digging depth	mm	7774
D	Max. reach	mm	11200
	Max. reach over ground level	mm	11000
	Breakout force	kN	175,7
	Tear-out force	kN	119

LIFTING CAPACITIES 340LC

Heights	2.5 m		3.0 m		3.5 m		4.0 m		4.5 m		5.0 m		6.0 m		7.0 m		8.0 m		8.5 m	
	LENGTHS	LATERAL	LENGTHS	LATERAL	LENGTHS	LATERAL	LENGTHS	LATERAL	LENGTHS	LATERAL	LENGTHS	LATERAL	LENGTHS	LATERAL	LENGTHS	LATERAL	LENGTHS	LATERAL	LENGTHS	LATERAL
Monoblock boom 6.50 m (C84.5M) with Stick 2.30 m (D84.2). Wheel base 2600 mm. Max. Reach 10.73 m																				
+ 7.5 m	-	-	-	-	-	-	-	-	-	-	-	-	-	-	6912	6502*	-	-	-	-
+ 6.0 m	-	-	-	-	-	-	-	-	-	-	-	-	-	-	6761	6518*	6723	5257	-	-
+ 4.5 m	-	-	-	-	-	-	-	-	10841	10841	9655	9655	8192	7911	7346	6339*	6853	5203	6736	4733
+ 3.0 m	-	-	-	-	-	-	-	-	-	-	12020	9556	9537	7516*	8163	6099*	7317	5064*	7026	4641
+ 1.5 m	-	-	-	-	-	-	-	-	-	-	-	-	10627	7194*	8904	5882*	7736*	4923*	7093*	4532*
+ 0 m	-	-	-	-	-	-	-	-	-	-	13704	8973*	11125	7018*	9212*	5739*	7626*	4823*	7009*	4455*
- 1.5 m	-	-	-	-	-	-	13225	12646*	14572	10510*	13276	8996*	11024	6982*	9162*	5695*	7604*	4803*	7021*	4466*
- 3.0 m	-	-	16968	16968	15789	15789	14553	12774*	13350	10640*	12227	9106	10268	7056*	8614	5762*	-	-	-	-
-4.5 m	15427	15427	16968	14193	13075	13075	12035	12035	11054	10896*	10119	9339*	8265	7276*	-	-	-	-	-	-
Monoblock boom 6.50 m (C84.5M) with Stick 2.80 m (D84.3). Wheel base 2600 mm. Max. Reach 11.20 m																				
+7.5 m	-	-	-	-	-	-	-	-	-	-	-	-	-	-	-	-	-	-	-	
+ 6.0 m	-	-	-	-	-	-	-	-	-	-	-	-	-	-	-	-	6238	5418*	-	-
+ 4.5 m	-	-	-	-	-	-	-	-	-	-	-	-	-	-	6988	6464*	6544	5313*	6300	4894*
+ 3.0 m	-	-	-	-	-	-	-	-	-	-	11204	9763	9080	7643*	7851	6197*	7075	5148*	6406	4847*
+ 1.5 m	-	-	-	-	-	-	-	-	-	-	12980	9198*	10293	7267*	8673	5945*	7618	4981*	6798	4723*
+ 0 m	-	-	-	-	-	-	-	-	11455	11455*	13632	8951*	10988	7036*	9220	5768*	7662*	4855*	7157*	4590*
- 1.5 m	-	-	-	-	10420	10420	13670	12425*	14989	10379*	13488	8915*	11092	6951*	9153*	5686*	7601*	4800*	7045*	4488*
- 3.0 m	-	-	-	-	17096	15632*	15437	12572	13975	10497	12694	9001*	10590	6996*	8943	5720*	7505	4856*	7006*	4452*
-4.5 m	-	-	16176	16176	14588	14588	13240	12845	12060	10731	11008	9205*	9161	7166	7327	5911*	-	-	-	-
Monoblock boom 6.50 m (C84.5M) with Stick 2.30 m (D84.2). Wheel base 2400 mm. Max. Reach 10.73 m																				
+ 7.5 m	-	-	-	-	-	-	-	-	-	-	-	-	-	-	6912	6015*	-	-	-	-
+ 6.0 m	-	-	-	-	-	-	-	-	-	-	-	-	-	-	6761	6032*	6723	4861*	-	-
+ 4.5 m	-	-	-	-	-	-	-	-	10841	10841	9655	9422*	8192	7293*	7346	5855*	6853	4808*	6736	4371*
+ 3.0 m	-	-	-	-	-	-	-	-	-	-	12020	8733*	9537	6907*	8163	5620*	7317	4670*	7026	4280*
+ 1.5 m	-	-	-	-	-	-	-	-	-	-	-	-	10627	6591*	8904	5406*	7736*	4531*	7093*	4173*
+ 0 m	-	-	-	-	-	-	-	-	-	-	13704	8165*	11125	6420*	9212*	5266*	7626*	4433*	7009*	4097*
- 1.5 m	-	-	-	-	-	-	13225	11418*	14572	9533*	13276	8187*	11024	6384*	9162*	5223*	7604*	4413*	7021*	4108*
- 3.0 m	-	-	16968	16968	15789	14287	14553	11542*	13350	9660*	12227	8295*	10268	6457*	8614	5289*	-	-	-	-
-4.5 m	15427	15427	14193	14193	13075	13075	12035	11814*	11054	9908*	10119	8522*	8265	6672*	-	-	-	-	-	-
Monoblock boom 6.50 m (C84.5M) with Stick 2.80 m (D84.3). Spurweite 2400 mm. Max. Reach 11.20 m																				
+7.5 m	-	-	-	-	-	-	-	-	-	-	-	-	-	-	-	-	-	-	-	-
+ 6.0 m	-	-	-	-	-	-	-	-	-	-	-	-	-	-	-	-	6238	5018*	6300	4529*
+ 4.5 m	-	-	-	-	-	-	-	-	-	-	-	-	-	-	6988	5978*	6544	4916*	6406	4483*
+ 3.0 m	-	-	-	-	-	-	-	-	-	-	11204	8934*	9080	7031*	7851	5715*	7075	4753*	6798	4361*
+ 1.5 m	-	-	-	-	-	-	-	-	-	-	12980	8384*	10293	6663*	8673	5468*	7618	4589*	7157*	4229*
+ 0 m	-	-	-	-	-	-	-	-	11455	9387*	13632	8144*	10988	6437*	9220	5294*	7662*	4464*	7045*	4128*
- 1.5 m	-	-	-	-	10420	10420	13670	11206*	14989	9406*	13488	8109*	11092	6354*	9153*	5213*	7601*	4410*	7006*	4094*
- 3.0 m	-	-	-	-	17096	14008*	15437	11348*	13975	9520*	12694	8192*	10590	6398*	8943	5247*	7505	4465*	-	-
-4.5 m	-	-	16176	16176	14588	14312*	13240	11611*	12060	9748*	11008	8391*	9161	6564*	7327	5434*	-	-	-	-

The specified max. loading capacities in kilogrammes include a stability of 25% or are calculated at 87% of the hydraulic lifting power, as per ISO10567.
These values are applicable at the tip of the arm with optimum positioning of the corresponding arm system. * Value limited due to hydraulics.

DIMENSION 340LC

340LC Transport postion

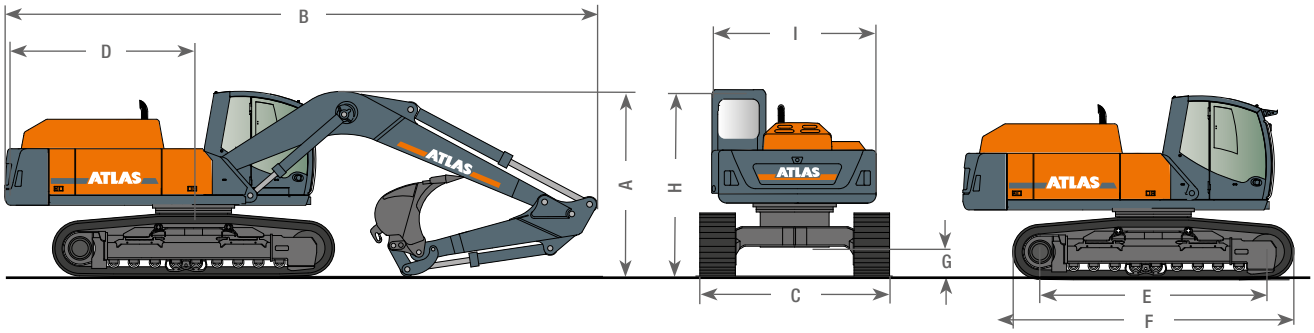

A	TRANSPORT HEIGHT		B	TRANSPORT LENGTH
	Monoblock, 5.57 m (C84.3M), 2.30 m (D84.2)....3.25 m			Monoblock, 5.57 m (C84.3M), 2.30 m (D84.2)....10.17 m
	Monoblock, 5.57 m (C84.3M), 2.80 m (D84.3)....3.30 m			Monoblock, 5.57 m (C84.3M), 2.80 m (D84.3)....10.19 m
	Monoblock, 6.50 m (C84.5M), 2.30 m (D84.2)....3.35 m			Monoblock, 6.50 m (C84.5M), 2.30 m (D84.2)....11.11 m
	Monoblock, 6.50 m (C84.5M), 2.80 m (D84.3)....3.45 m			Monoblock, 6.50 m (C84.5M), 2.80 m (D84.3)....11.12 m
C	TRANSPORT WIDTH WHEEL	TRACK 2.60 m	F	RANGE....4.82 m
	Base plate width 600 mm....3.20 m		G	GROUND CLEARANCE....0.46 m
D	REAR SWIVEL RADIUS....3.30 m		H	HEIGHT OVER CABIN....3.11 m
E	BEARING CHAIN LENGTH....3.89 m		I	SUPERSTRUCTURE WIDTH....2.74 m

Design changes reserved, data not binding. Devices comply with the new European safety regulations.

340LC-EN(1) Effective date: 05/2022. Product specifications and prices are subject to change without notice or obligation. The photographs and/or drawings in this document are for illustrative purposes only. Refer to the appropriate Operator's Manual for instructions on the proper use of this equipment. Failure to follow the appropriate Operator's Manual when using our equipment or to otherwise act irresponsibly may result in serious injury or death. The only warranty applicable to our equipment is the standard written warranty applicable to the particular product and sale and Atlas makes no other warranty, express or implied. The only warranty applicable to our equipment is the standard written warranty applicable to the particular product and sale and Atlas makes no other warranty, express or implied. Products and services listed may be trademarks, service marks or trade-names of Atlas GmbH and/or its subsidiaries. All rights are reserved. Atlas® is a registered trademark of Atlas GmbH.
Copyright © 2022 Atlas GmbH.
Ref. No. 6203427

GANDERKESEE FACTORY
Atlas GmbH
Atlasstraße 6
D-27777 Ganderkesee,
Germany

Tel.: +49 (0) 4222 954 0
Fax: +49 (0) 4222 954 220
E-mail: info@atlasgmbh.com
www.atlasgmbh.com

VECHTA FACTORY
Atlas GmbH
Theodor-Heuss-Str. 3
D-49377 Vechta
Germany

T: +49 (0) 4441 954 0
F: +49 (0) 4441 954 299
E-mail: info@atlasgmbh.com
www.atlasgmbh.com

DELMENHORST FACTORY
Atlas GmbH
Stedinger Straße 324
D-27751 Delmenhorst
Germany

T: +49 (0) 4221 49 10
F: +49 (0) 4221 49 14 43
E-mail: info@atlasgmbh.com
www.atlasgmbh.com

ATLAS CRANES UK LTD
NATIONAL SALES & SERVICE FACILITY
Wharfedale Road,
Euroway Trading Est.
Bradford, England BD4 6SL
United Kingdom
T: +44 8444 99 66 88
F: +44 1274 65 37 85
E-mail: atlasuk@atlasgmbh.com
www.atlas-cranes.co.uk
www.atlasgmbh.com

ATLAS
SINCE 1919

Status: 05/2022