ATLAS 1919 - 2019

ATLAS

SINCE 1919

FAST. RELIABLE. VERSATILE.

- 41 - 44.5 t
- 180 kW (245 HP) EU Stage V
- 13.5 - 18.2 m

MADE IN GERMANY

MATERIAL HANDLING MACHINE 400MH

WWW.ATLASGMBH.COM

ATLAS – CONSTRUCTION MACHINERY MANUFACTURER WITH TRADITION

From person to person

When Hinrich Weyhausen started selling construction and agricultural machinery in 1919, he discovered that the machines which his customers actually needed were not available. So he listened to them carefully and went about building the machines himself – exactly according to the requirements of the people who used his machines every day. He carried out pioneering work with a passion under the brand name of Atlas.
His focus was always on the benefit of the machines. And nothing has changed for us in terms of this ideal today.

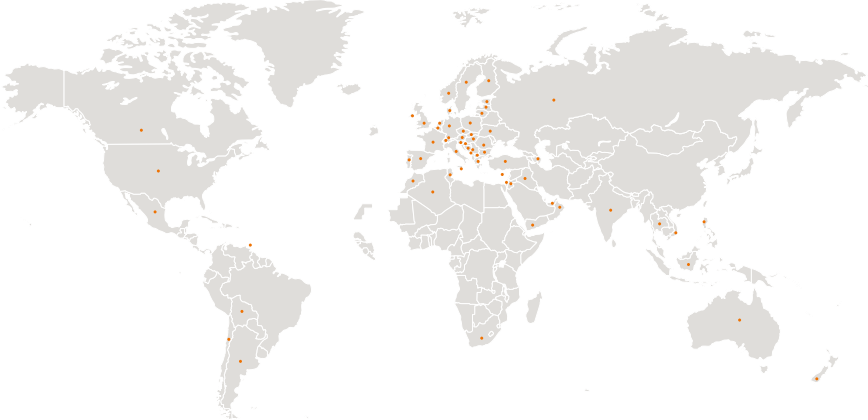

Atlas will make you strong with excellent products and a comprehensive service.

With highly motivated employees, a great deal of commitment and expertise ATLAS GmbH develops successful crane & excavator technologies. Numerous customers, engineers and experts all around the globe have made their contribution. The result is robust equipment to enable you to work more effectively and safely than ever before.

As our know-how grew, so too did our dealer and service network worldwide.
We can hence guarantee – in those days and today too – that we will always be on the spot when you need us.

Atlas manufactures a wide range of equipment for the construction, railroad, material handling and infrastructure industries. You will find more information on Atlas under **www.atlasgmbh.com.**

CONSTRUCTION

TRANSPORT

INFRASTRUCTURE

RECYCLING

CUSTOMER SATISFACTION IS OUR PRIORITY!

WE ARE COMMITTED
to providing our customers with highest quality products and services.

QUALITY STANDARDS AND CUSTOMER SATISFACTION
are measured in terms of service performance, reliability, relevance and timeliness.

OUR COMPANY'S MISSION, GOALS AND OBJECTIVES
are directed towards ongoing process improvement as a basis for strengthening our competitive position and for improving product quality and service standards.

QUALITY STANDARDS AND CUSTOMER SATISFACTION
are measured in terms of product performance and reliability.

PRODUCT RANGE
400MH

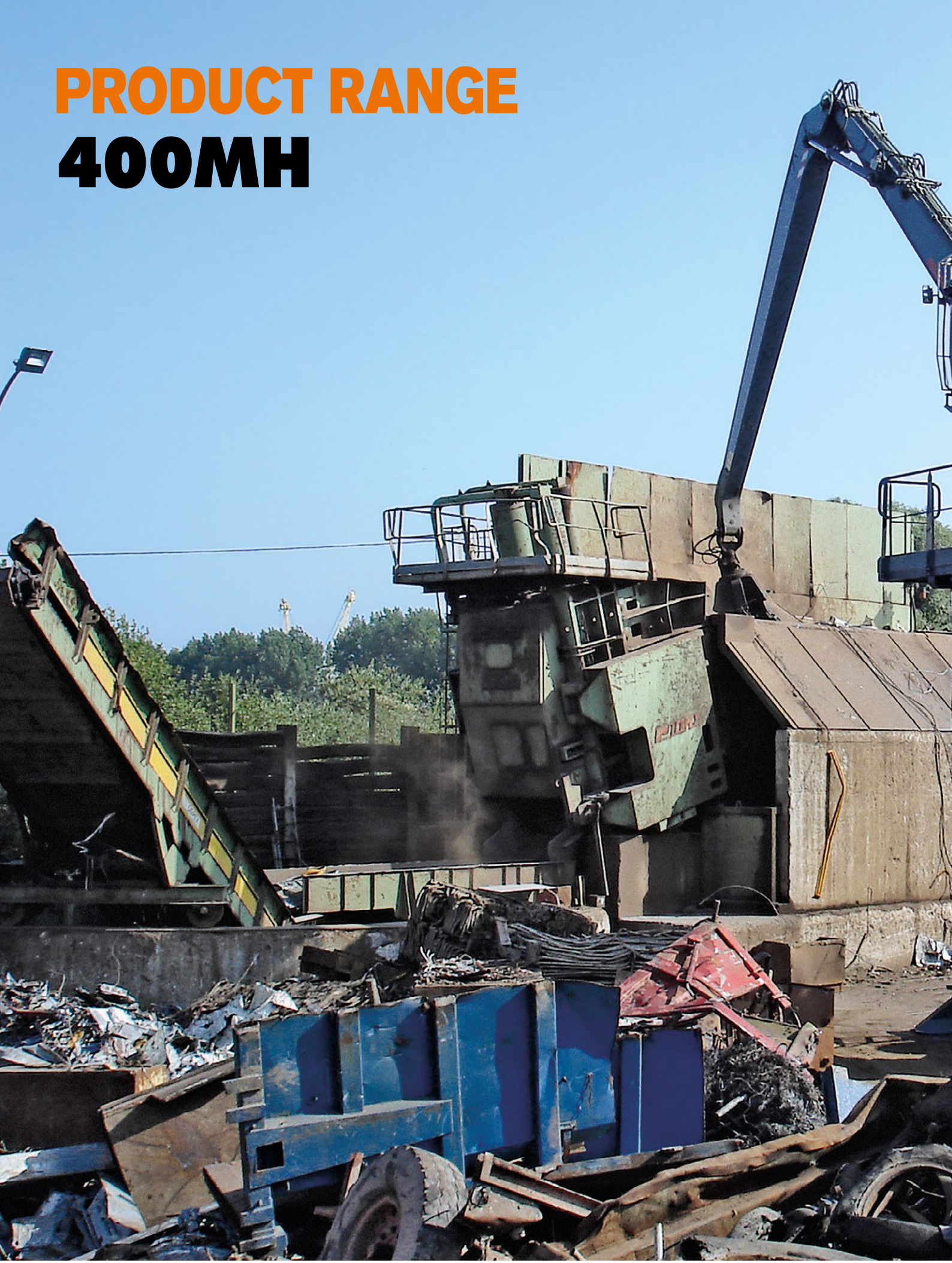

EXTENSIVE DEALER NETWORK
EXCELLENT SERVICE
CUSTOMER FOCUSED

ATLAS - The new excavator cabin

The new ATLAS cabin – Best climate, sharp display, digital and direct, more space, best view, extremely quiet, feel good

Clear control panel – Direct selection via keys or digital control via button.....

Most powerful air conditioning system - short airways - large lines - cross sections - silent

Move safely: Standard lateral- and rear view cameras

Best view – especially to the right

ATLAS - The new excavator cabin

Stay communicated - radio with USB connection - mobile phone tray by the left joystick

Lunch break - space for cool box with electrical connection - behind the driver's seat

Easy: Upper carriage lock at the push of a button on T

Bottle holder near the driver

Floor non-slip and
Easy to sweep – storage space for tools and materials

TECHNICAL SPECIFICATION 400MH

ENGINE

Power rating.....180 kW (245 HP)	Bore / cylinder stroke.....101 / 126	**STANDARD BASIC EQUIPMENT:**
RPM.....1900/min	Cooling system.....Water-cooled	• Automatic idling system / Engine stop
Model.....Deutz TCD 6.1 L6 EU Stage V	Air filter.....Dry air filter	• Cold start assistance
Design.....Turbocharger / intercooler	Battery.....2 x 12 V / 100 Ah	• Diesel pre-filter
Cylinder capacity.....6100 cm^3	Generator.....24 V / 55 A	• Engine monitoring
Number of cylinders.....6	Starter.....24 V / 4.8 kW	

HYDRAULIC SYSTEM

• AWE 5 system (Load sensing)	• Pipe break protection valves for lifting and articulated cylinders	• Operating modes:
• Load limit controlled high-performance pump	• Proportional grab and grab rotating function	F1 (Fine)
• Fuel-efficient flow-on-demand control	• 3 circuits for additional consumer loads possible	F2 (Eco)
• Sensitive, proportional, independent control	• Max. oil flow.....640 l/min	F3 (Power)
• Primary and secondary protection against overload	• Max. operating pressure.....320 bar	• Accumulator for emergency lowering of the arm system
• Suction valves for all work functions	• Cylinder end position damping	• Load-limit control

SWING ASSEMBLY

• Axial piston motor with priority valve	• Automatically controlled multi-disc brake	• Swing torque.....93.4 kNm
• Planetary transmission	• Two, two-stage valves	• Max. swing speed.....8.5/min

TRACTION DRIVE AND BRAKES

• Variable displacement motor	• Automotive traveling and cruise control:	• Tractive force.....145 kN
• Manual gearbox	• Max. speed.....16 km/h	• Gradeability.....5.0 %
• Double-acting brake valve	• Off-road speed.....5 km/h	• Dual-circuit brake system.....Drum brake
• Travel direction pre-selection via switch in joystick	• Crawling speed.....1 km/h	• Parking brake.....Spring-loaded brake

UNDERCARRIAGE

• Steering axle with automatic oscillating axle locking	• Heavy duty axles	• STD tires: Mitas 12.00-24
• Additional axis locking via left joystick	• Toolbox in undercarriage	

WORKING EQUIPMENT 400MH

DRIVER´S CAB

- Meets latest safety standards (ROPS)
- Extra large entry zone
- Spacious leg room
- Radio preparation with mute function
- Ready for electric cooling box
- Different options for storage, compartment for documents
- Heat-absorbing glass, tinted windows
- Excellent all-way visibility
- Bottle holder

DRIVER'S SEAT:

- Comfort seat with headrest
- Arm rests and lumbar support
- Seat adjustable separately from console
- Air suspension
- Heated
- Horizontal and vertical suspension
- Lumbar support

CONTROL:

- Ergonomic joysticks with proportional slide control
- Slim steering column, height and tilt adjustable
- Indicators, controls and operating switches are clearly arranged
- Swing axle lock in the left joystick

MONITORING:

- Operating data display screen
- Automatic system for monitoring, warning and storage of data
- Rear view security camera
- Right side camera

CLIMATE CONTROL:

- Automatic climate control
- Excellent air distribution through optimally arranged nozzles
- Refrigerant R134a

SOUND LEVELS:

- ISO 6396 (L_pA) in driver's cab ..... 73 dB(A)
- 2000/14 EG (L_wA) ambience level ..... 104 dB(A)

ADDITIONAL EQUIPMENT

- Beacon light
- Gear protection
- Cabin Sliding door
- Cab protection guard
- Cab elevation
- Joystick steering
- 270º camera system
- LED working lights
- Alarm-signal while driving
- Auxiliary heating with water circuit
- Automatic working brake
- Switch hydraulic attachment kit, supports separately at front and rear
- Hydraulic add-on kit, switch supports axially separately
- Proportional control of supports by slide in joystick
- Automatically controlled and monitored electric central lubrication system for uppercarriage and arm equipment
- Premium Driver seat (Actimo Evolution)
- Electric cooling box
- Radio with USB
- GPS/GSM telemetric system for monitoring of operating data, consumption, position
- Biodegradable oil
- Refueling pump

Other additional equipment: See price list

Special options: upon request

FILL CAPACITIES

- Fuel tank .....425 litres
- Cooling system.....48 litres
- Engine oil.....15.5 litres
- Hydraulic tank .....505 litres
- Hydraulic system.....970 litres
- Ad Blue® .....32 litres

OPERATING WEIGHTS

	MONOBLOCK BOOM 10.60 m (C84.7i)	MONOBLOCK BOOM 10.60 m (C84.7i)
	Stick 6.90 m (D84.16i)	**Stick 7.70 m (D84.17i)**
Support dozer blade		
SDB / outriggers		
4 support outriggers	44.2 t	44.5 t

Operating weight incl. driver, fuel, lubricants and coolant plus 1.0 ton for attachments

ATTACHMENTS

- Clamshell grab
- Orange peel grab
- Load hook
- Load lifting magnet
- Log grab
- Sorting grab

WORKING RANGES 400MH

Loading boom 10.60 m (C84.7i) and stick 6.90 m (D84.16i)

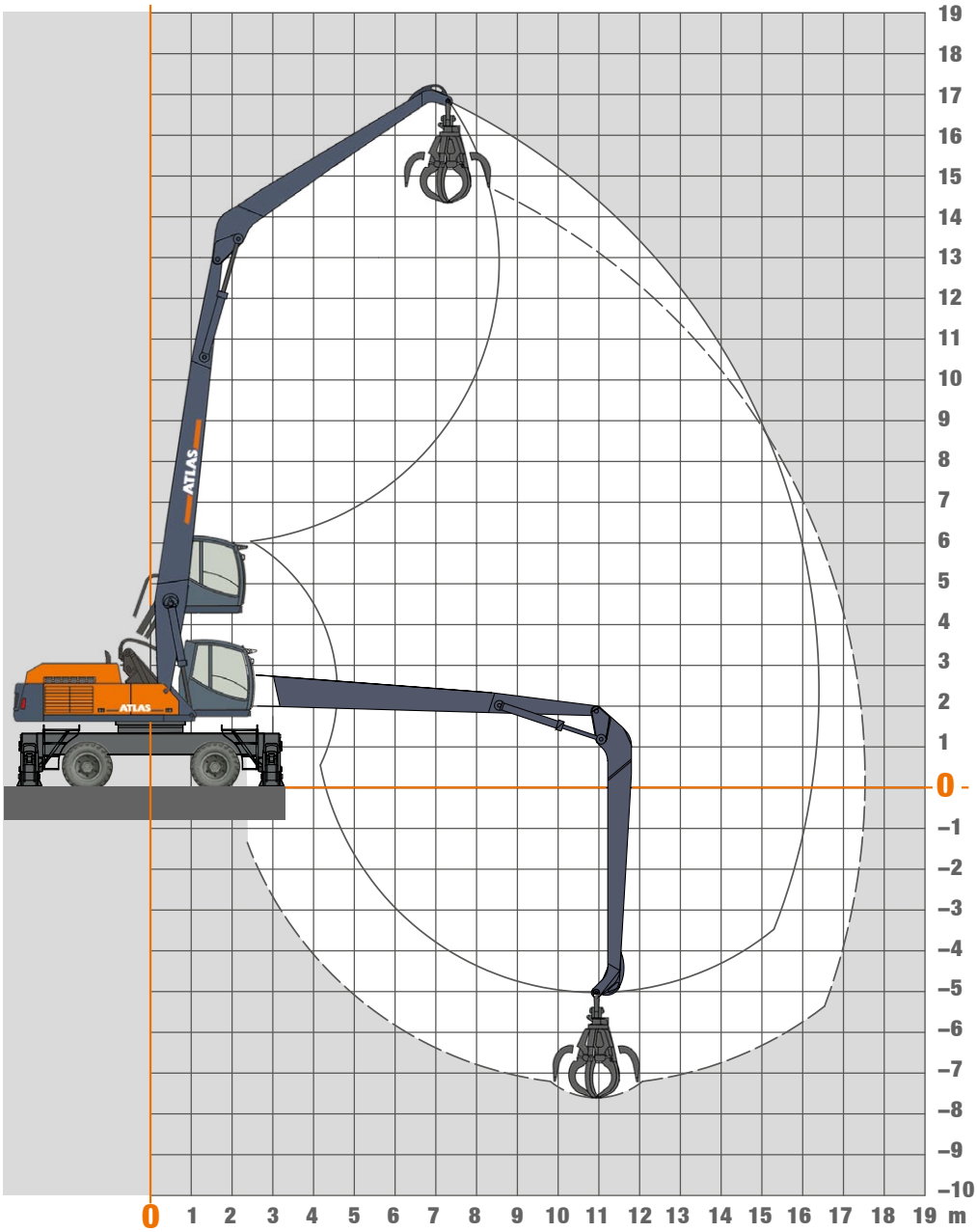

Attachments

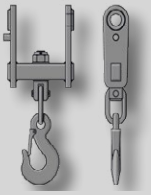

Load hook

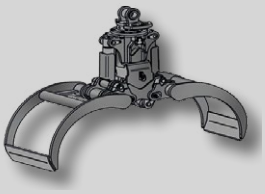

Log grab

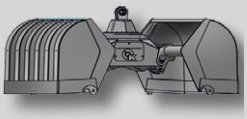

Clamshell grab

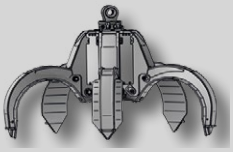

Orange peel grab

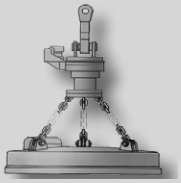

Load lifting magnet

LIFTING CAPACITIES 400MH

Lifting Capacities Loading boom 10.60 m (C84.7i) with stick 6.90 m (D84.16i). Max. reach 17.50 m

HEIGHT	Undercarriage position		4,0 m	5,0 m	6,0 m	7,0 m	8,0 m	9,0 m	10,0 m	11,0 m	12,0 m	13,0 m	14,0 m	15,0 m	16,0 m
15,0 m	FRONT	outriggers down						3127	2799						
		outriggers up						3127	2799						
	LATERAL	outriggers down						3127	2799						
		outriggers up						3127	2799						
13,5 m	FRONT	outriggers down						3440	3225	2919	2486				
		outriggers up						3440	3225	2919	2486				
	LATERAL	outriggers down						3440	3225	2919	2486				
		outriggers up						3440	3225	2919	2486				
12,0 m	FRONT	outriggers down						3718	3573	3344	3014	2553			
		outriggers up						3718	3573	3344	3014	2553			
	LATERAL	outriggers down						3718	3573	3344	3014	2553			
		outriggers up						3718	3573	3344	3014	2553			
10,5 m	FRONT	outriggers down						4054	3957	3766	3477	3078	2536		
		outriggers up						4054	3957	3766	3477	3078	2536		
	LATERAL	outriggers down						4054	3957	3766	3477	3078	2536		
		outriggers up						4054	3957	3766	3477	3054*	2536		
9,0 m	FRONT	outriggers down					4531	4566	4482	4288	3989	3587	3070	2393	
		outriggers up					4531	4566	4482	4288	3989	3587	3070	2393	
	LATERAL	outriggers down					4531	4566	4482	4288	3989	3587	3070	2393	
		outriggers up					4531	4566	4482	4042*	3475*	3004*	2603*	2254*	
7,5 m	FRONT	outriggers down			4949	5322	5487	5473	5312	4970	4590	4170	3602	2917	
		outriggers up			4949	5322	5487	5473	5312	4970	4337*	3792*	3334*	2917	
	LATERAL	outriggers down			4949	5322	5487	5473	5312	4970	4590	4170	3602	2917	
		outriggers up			4949	5322	5487	5376*	4551*	3896*	3363*	2920*	2544*	2219*	
6,0 m	FRONT	outriggers down	9452	8893	8566	7990	6995	6227	5614	5112	4690	4328	4011	3421	2516
		outriggers up	9452	8893	8566	7990	6995	6227	5567*	4807*	4191*	3681*	3251*	2882*	2516
	LATERAL	outriggers down	9452	8893	8566	7990	6995	6227	5614	5112	4690	4328	4011	3421	2516
		outriggers up	9452	8893	8566	7335*	6036*	5067*	4315*	3715*	3223*	2813*	2464*	2163*	1897*
4,5 m	FRONT	outriggers down		2907	10113	8513	7360	6487	5801	5245	4782	4388	4043	3732	2925
		outriggers up		2907	10113	8513	7292*	6165*	5293*	4597*	4029*	3556*	3155*	2811*	2510*
	LATERAL	outriggers down		2907	10113	8513	7360	6487	5801	5245	4782	4388	4043	3732	2925
		outriggers up		2907	8189*	6678*	5569*	4722*	4054*	3514*	3067*	2692*	2372*	2094*	1850*
3,0 m	FRONT	outriggers down			2142	8589	7627	6683	5941	5342	4845	4422	4052	3717	3273
		outriggers up			2142	8124*	6804*	5805*	5020*	4387*	3865*	3428*	3057*	2737*	2457*
	LATERAL	outriggers down			2142	8589	7627	6683	5941	5342	4845	4422	4052	3717	3273
		outriggers up			2142	6045*	5110*	4381*	3793*	3312*	2910*	2569*	2276*	2022*	1799*

The specified max. loading capacities in kilograms (kg) include a stability of 25% or are calculated at 87% of the hydraulic lifting power, as per ISO10567. These values are applicable at the tip of the arm with optimum positioning of the corresponding arm system. Weights of attached load carrying accessories (grab, magnet, load hook, etc.) are not included with the load carrying values.
*Value limited due to excavator stability.

WORKING RANGES 400MH

Loading boom 10.60 m (C84.7i) and stick 7.70 m (D84.17i), pylon 4.0 m

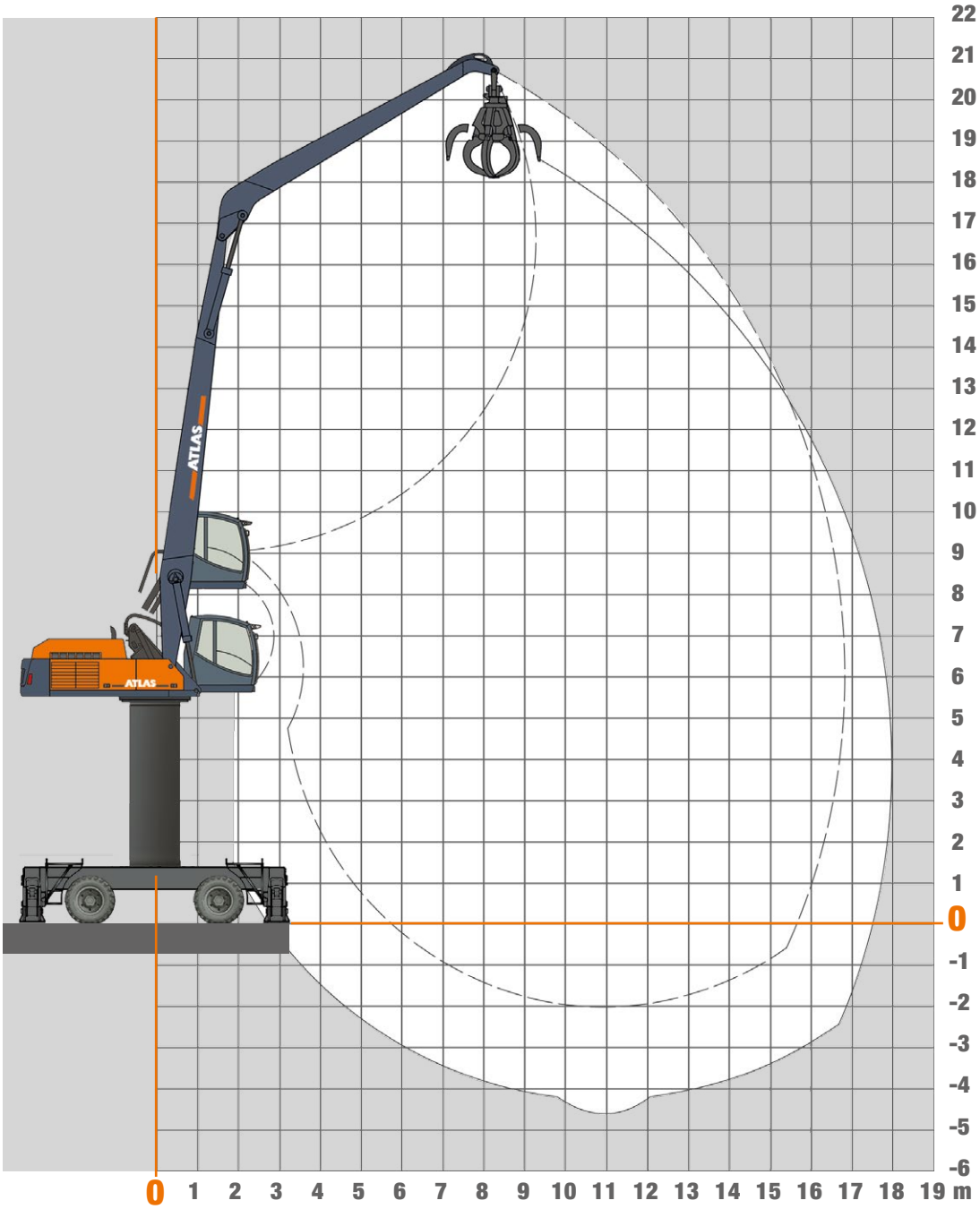

Attachments

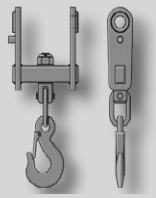

Load hook

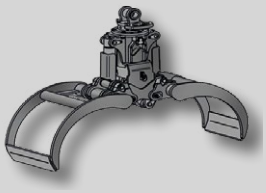

Log grab

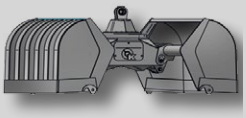

Clamshell grab

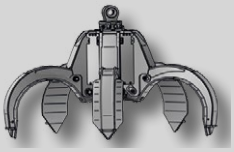

Orange peel grab

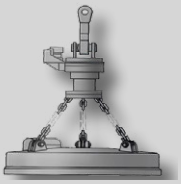

Load lifting magnet

LIFTING CAPACITIES 400MH

Lifting Capacities Loading boom 10.60 m (C84.7i) with stick 7.70 m (D84.17i), pylon 4.0 m. Max. reach 18.06 m

HEIGHT	Undercarriage position		5,5 m	6,5 m	7,5 m	8,5 m	9,5 m	10,5 m	11,5 m	12,5 m	13,5 m	14,5 m	15,5 m	16,5 m
15,0 m	FRONT	outriggers down					2900	2680						
		outriggers up					2900	2680						
	LATERAL	outriggers down					2900	2680						
		outriggers up					2900	2680						
13,5 m	FRONT	outriggers down					3075	2936	2729	2432				
		outriggers up					3075	2936	2729	2432				
	LATERAL	outriggers down					3075	2936	2729	2432				
		outriggers up					3075	2936	2729	2432				
12,0 m	FRONT	outriggers down					3231	3153	3007	2783	2460			
		outriggers up					3231	3153	3007	2783	2460			
	LATERAL	outriggers down					3231	3153	3007	2783	2460			
		outriggers up					3231	3153	3007	2783	2460			
10,5 m	FRONT	outriggers down					3425	3397	3291	3105	2829	2443		
		outriggers up					3425	3397	3291	3105	2829	2443		
	LATERAL	outriggers down					3425	3397	3291	3105	2829	2443		
		outriggers up					3425	3397	3291	3105	2829	2443		
9,0 m	FRONT	outriggers down				3633	3732	3735	3646	3467	3198	2832	2344	
		outriggers up				3633	3732	3735	3646	3467	3198	2832	2344	
	LATERAL	outriggers down				3633	3732	3735	3646	3467	3198	2832	2344	
		outriggers up				3633	3732	3735	3646	3306*	2860*	2479*	2147*	
7,5 m	FRONT	outriggers down			3900	4154	4272	4264	4147	3931	3626	3231	2736	
		outriggers up			3900	4154	4272	4264	4147	3931	3614*	3178*	2736	
	LATERAL	outriggers down			3900	4154	4272	4264	4147	3931	3626	3231	2736	
		outriggers up			3900	4154	4272	4264	3707*	3203*	2781*	2421*	2110*	
6,0 m	FRONT	outriggers down	4067	4734	5127	5298	5294	5151	4721	4354	4035	3685	3128	2462
		outriggers up	4067	4734	5127	5298	5294	5151	4574*	3993*	3509*	3099*	2745*	2436*
	LATERAL	outriggers down	4067	4734	5127	5298	5294	5151	4721	4354	4035	3685	3128	2462
		outriggers up	4067	4734	5127	5298	4819*	4111*	3541*	3072*	2679*	2344*	2054*	1798*
4,5 m	FRONT	outriggers down	10580	8821	7575	6643	5918	5336	4855	4450	4100	3792	3513	2793
		outriggers up	10580	8821	7575	6643	5853*	5035*	4379*	3840*	3389*	3006*	2676*	2387*
	LATERAL	outriggers down	10580	8821	7575	6643	5918	5336	4855	4450	4100	3792	3513	2793
		outriggers up	9823*	7782*	6360*	5313*	4509*	3872*	3354*	2925*	2564*	2254*	1986*	1750*
3,0 m	FRONT	outriggers down	2081	9395	7981	6936	6131	5490	4965	4525	4147	3814	3511	3091
		outriggers up	2081	9343*	7676*	6453*	5518*	4778*	4178*	3682*	3265*	2909*	2601*	2332*
	LATERAL	outriggers down	2081	9395	7981	6936	6131	5490	4965	4525	4147	3814	3511	3091
		outriggers up	2081	6970*	5788*	4892*	4190*	3625*	3161*	2773*	2444*	2160*	1914*	1697*
1,5 m	FRONT	outriggers down	519	2557	8208	7111	6261	5582	5026	4559	4157	3802	3478	3168
		outriggers up	519	2557	7143*	6052*	5209*	4538*	3989*	3532*	3146*	2815*	2529*	2280*
	LATERAL	outriggers down	519	2557	8208	7111	6261	5582	5026	4559	4157	3802	3478	3168
		outriggers up	519	2557	5289*	4513*	3897*	3396*	2980*	2629*	2329*	2070*	1844*	1646*
0 m	FRONT	outriggers down	432	1628	3939	7121	6271	5583	5013	4531	4113	3740	3397	3061
		outriggers up	432	1628	3939	5736*	4956*	4334*	3825*	3401*	3041*	2733*	2468*	2237*
	LATERAL	outriggers down	432	1628	3939	7121	6271	5583	5013	4531	4113	3740	3397	3061
		outriggers up	432	1628	3939	4215*	3656*	3201*	2823*	2502*	2228*	1990*	1784*	1605*
-1,5 m	FRONT	outriggers down		1565	3105	6305	6136	5468	4905	4422	3997	3612	3247	
		outriggers up		1565	3105	5521*	4773*	4181*	3700*	3299*	2961*	2672*	2423*	
	LATERAL	outriggers down		1565	3105	6305	6136	5468	4905	4422	3997	3612	3247	
		outriggers up		1565	3105	4011*	3482*	3055*	2702*	2404*	2150*	1931*	1741*	
-3,0 m	FRONT	outriggers down		1775	3017	5336	5843	5220	4683	4210	3784	3386	2994	
		outriggers up		1775	3017	5336	4665*	4086*	3619*	3234*	2909*	2634*	2399*	
	LATERAL	outriggers down		1775	3017	5336	5843	5220	4683	4210	3784	3386	2994	
		outriggers up		1775	3017	3900*	3379*	2964*	2625*	2341*	2100*	1894*	1717*	
-4,5 m	FRONT	outriggers down			3229	5243	5363	4808	4312	3860	3437	3023		
		outriggers up			3229	5243	4618*	4042*	3581*	3203*	2888*	2623*		
	LATERAL	outriggers down			3229	5243	5363	4808	4312	3860	3437	3023		
		outriggers up			3229	3859*	3335*	2922*	2588*	2311*	2079*	1883*		

The specified max. loading capacities in kilograms (kg) include a stability of 25% or are calculated at 87% of the hydraulic lifting power, as per ISO10567. These values are applicable at the tip of the arm with optimum positioning of the corresponding arm system. Weights of attached load carrying accessories (grab, magnet, load hook, etc.) are not included with the load carrying values.
*Value limited due to excavator stability.

WORKING RANGES 400MH

Loading boom 10.00 m (C85.7iB) and stick 7.74 m (D84.17i)

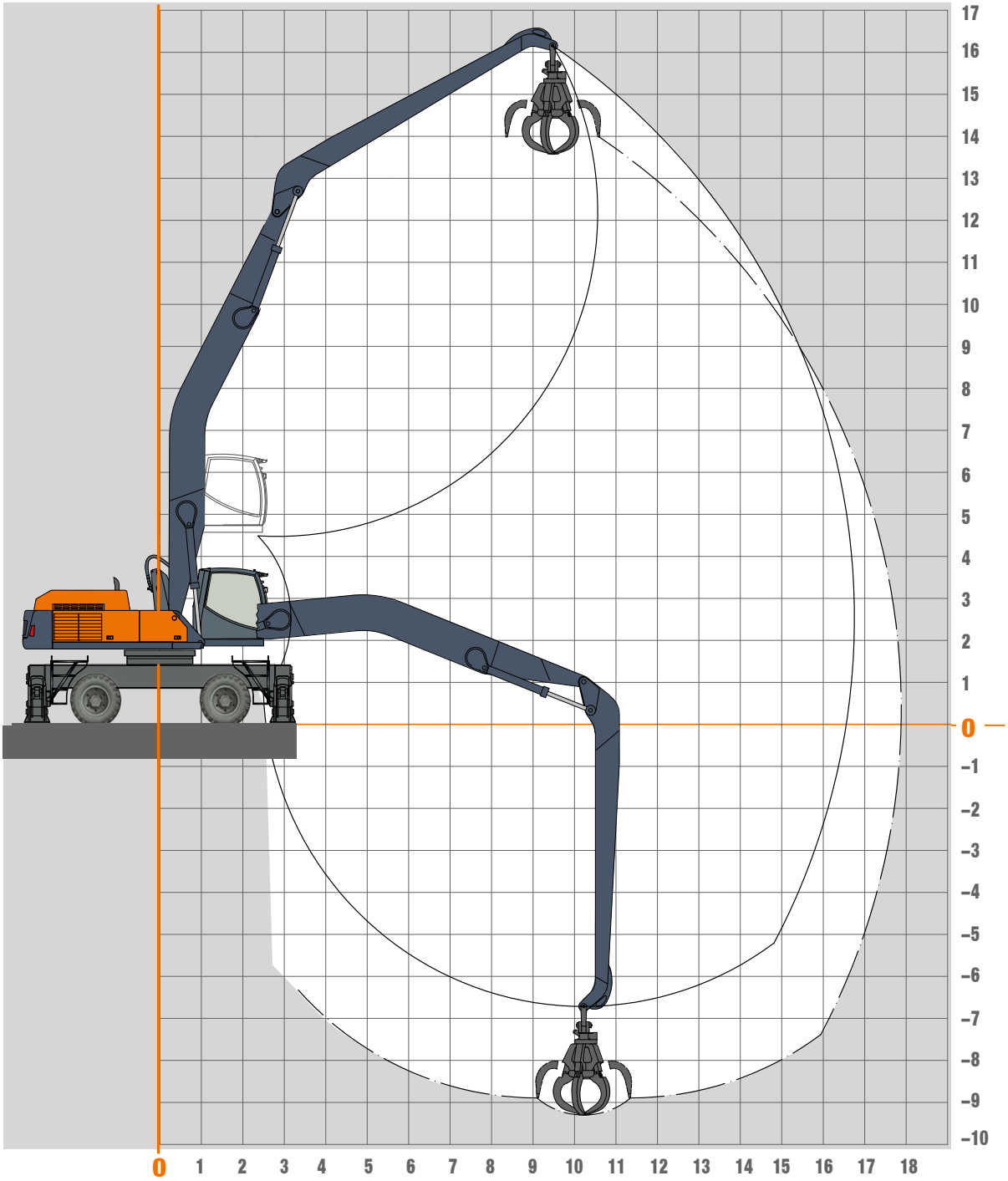

Attachments

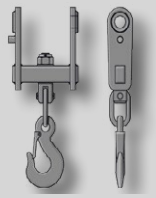
Load hook

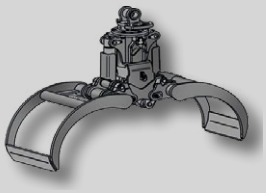
Log grab

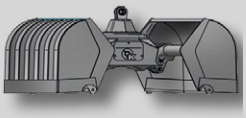
Clamshell grab

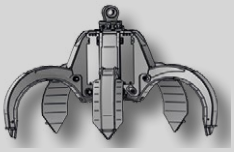
Orange peel grab

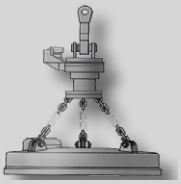
Load lifting magnet

LIFTING CAPACITIES 400MH

Lifting Capacities Loading boom 10.00 m (C85.7iB) with stick 7.74 m (D84.17i), Max. reach 17,90 m

HEIGHT	Undercarriage position		5,0 m	6,0 m	7,0 m	8,0 m	9,0 m	10,0 m	11,0 m	12,0 m	13,0 m	14,0 m	15,0 m
+13,5 m	FRONT	outriggers down							4371				
		outriggers up							4371				
	LATERAL	outriggers down							4371				
		outriggers up							3646*				
+12,0 m	FRONT	outriggers down							4324	4098			
		outriggers up							4324	4098			
	LATERAL	outriggers down							4324	4098			
		outriggers up							3697*	3104*			
+10,5 m	FRONT	outriggers down							4347	4104	3889		
		outriggers up							4347	4104	3889		
	LATERAL	outriggers down							4347	4104	3889		
		outriggers up							3680*	3103*	2621*		
+9,0 m	FRONT	outriggers down							4427	4160	3922	3709	
		outriggers up							4427	4160	3922	3608*	
	LATERAL	outriggers down							4427	4160	3922	3709	
		outriggers up							3607*	3050*	2588*	2195*	
+7,5 m	FRONT	outriggers down						4905	4556	4254	3988	3750	3534
		outriggers up						4905	4556	4254	3988	3556*	3111*
	LATERAL	outriggers down						4905	4556	4254	3988	3750	3534
		outriggers up						4135*	3482*	2954*	2516*	2146*	1826*
+6,0 m	FRONT	outriggers down				6191	5605	5123	4719	4374	4074	3809	3568
		outriggers up				6191	5605	5123	4719	4374	3968*	3475*	3055*
	LATERAL	outriggers down				6191	5605	5123	4719	4374	4074	3809	3568
		outriggers up				5684*	4685*	3919*	3313*	2822*	2414*	2070*	1773*
+4,5 m	FRONT	outriggers down		8778	7553	6640	5932	5364	4897	4505	4167	3871	3604
		outriggers up		8778	7553	6640	5932	5364	4897	4389*	3837*	3374*	2980*
	LATERAL	outriggers down		8778	7553	6640	5932	5364	4897	4505	4167	3871	3604
		outriggers up		8118*	6428*	5234*	4346*	3659*	3111*	2664*	2291*	1975*	1703*
+3,0 m	FRONT	outriggers down	11907	9678	8167	7075	6247	5595	5066	4627	4252	3924	3630
		outriggers up	11907	9678	8167	7075	6247	5591*	4825*	4206*	3694*	3264*	2896*
	LATERAL	outriggers down	11907	9678	8167	7075	6247	5595	5066	4627	4252	3924	3520*
		outriggers up	9109*	7110*	5738*	4737*	3976*	3376*	2892*	2493*	2157*	1871*	1623*
+1,5 m	FRONT	outriggers down	4047	10319	8632	7415	6497	5778	5198	4717	4309	3952	3631
		outriggers up	4047	10319	8632	7306*	6168*	5290*	4592*	4024*	3552*	3153*	2812*
	LATERAL	outriggers down	4047	10319	8632	7415	6497	5778	5198	4717	4304*	3834*	3434*
		outriggers up	4047	6184*	5086*	4260*	3616*	3100*	2676*	2323*	2023*	1766*	1543*
0 m	FRONT	outriggers down	3128	7401	8843	7590	6632	5876	5263	4754	4319	3937	3589
		outriggers up	3128	7401	8259*	6862*	5826*	5024*	4383*	3859*	3422*	3051*	2734*
	LATERAL	outriggers down	3128	7401	8843	7590	6632	5876	5263	4695*	4171*	3730*	3355*
		outriggers up	3128	5513*	4572*	3863*	3306*	2855*	2482*	2169*	1901*	1670*	1469*
-1,5 m	FRONT	outriggers down		6736	8761	7558	6615	5857	5235	4711	4259	3858	3486
		outriggers up		6736	7865*	6539*	5565*	4813*	4213*	3723*	3313*	2969*	2674*
	LATERAL	outriggers down		6736	8761	7558	6615	5857	5152*	4555*	4061*	3646*	3294*
		outriggers up		5119*	4227*	3575*	3069*	2661*	2325*	2041*	1799*	1592*	1413*
-3,0 m	FRONT	outriggers down		7300	8405	7311	6427	5701	5091	4569	4109	3690	3287
		outriggers up		7300	7654*	6345*	5395*	4670*	4095*	3628*	3240*	2914*	2637*
	LATERAL	outriggers down		7300	8405	7311	6427	5701	5031*	4458*	3986*	3590*	3256*
		outriggers up		4942*	4042*	3401*	2915*	2530*	2215*	1953*	1730*	1540*	1377*
-4,5 m	FRONT	outriggers down		8347	7770	6833	6046	5377	4800	4291	3829	3390	
		outriggers up		8347	7574*	6257*	5310*	4593*	4030*	3576*	3201*	2889*	
	LATERAL	outriggers down		8347	7770	6833	6046	5377	4800	4291	3829	3390	
		outriggers up		4899*	3972*	3322*	2837*	2459*	2155*	1904*	1694*	1517*	
-6,0 m	FRONT	outriggers down			6848	6099	5437	4849	4321	3833	3367		
		outriggers up			6848	6099	5295*	4576*	4016*	3568*	3203*		
	LATERAL	outriggers down			6848	6099	5437	4849	4321	3833	3367		
		outriggers up			3989*	3318*	2824*	2444*	2142*	1897*	1695*		

The specified max. loading capacities in kilograms (kg) include a stability of 25% or are calculated at 87% of the hydraulic lifting power, as per ISO10567. These values are applicable at the tip of the arm with optimum positioning of the corresponding arm system. Weights of attached load carrying accessories (grab, magnet, load hook, etc.) are not included with the load carrying values.
*Value limited due to excavator stability.

DIMENSION 400MH

400MH Transport position

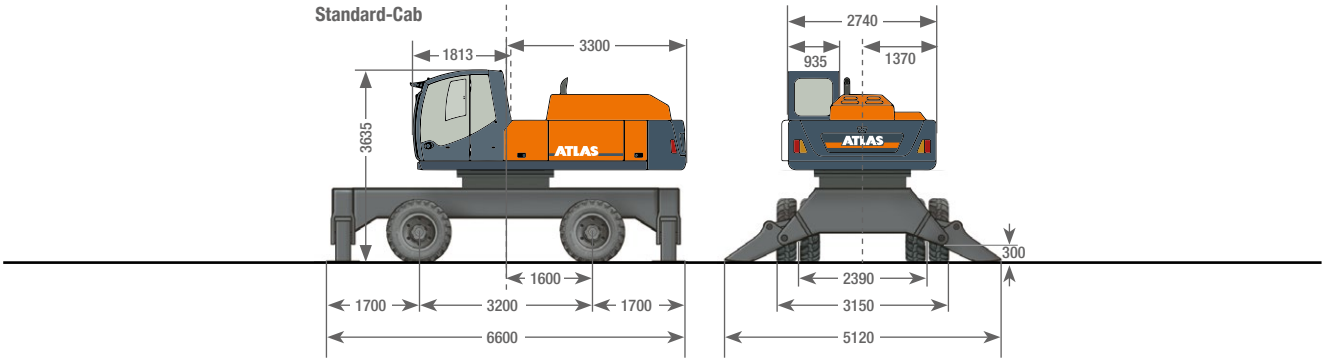

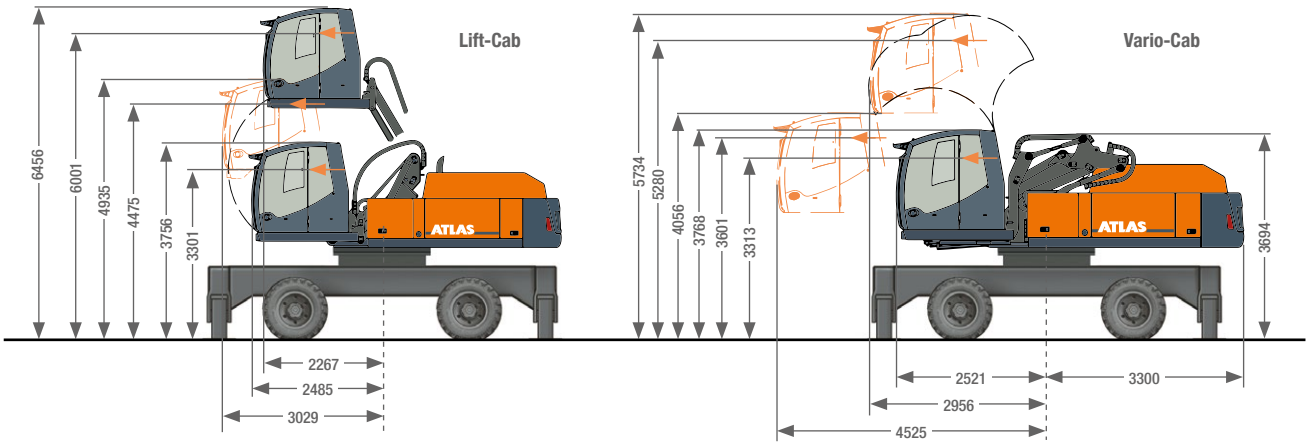

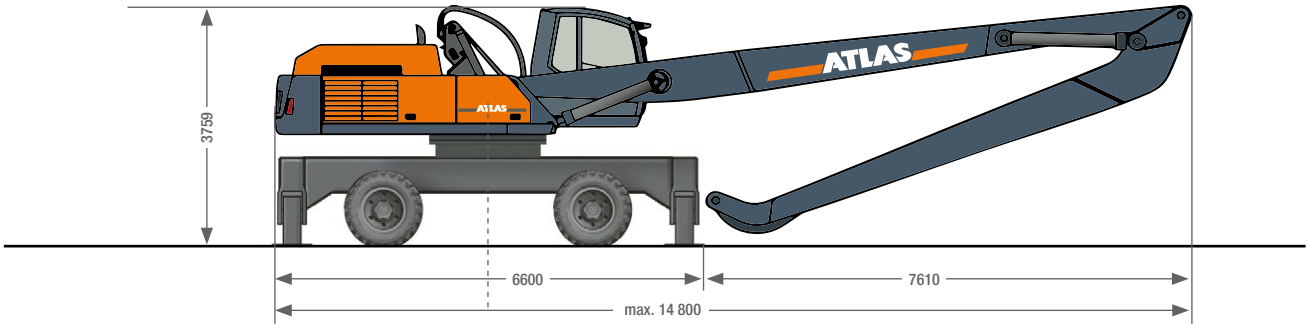

Further cabin versions on demand

400MH-EN (1) Effective date: 09/2024. Product specifications and prices are subject to change without notice or obligation. The photographs and/or drawings in this document are for illustrative purposes only. Refer to the appropriate Operator's Manual for instructions on the proper use of this equipment. Failure to follow the appropriate Operator's Manual when using our equipment or to otherwise act irresponsibly may result in serious injury or death. The only warranty applicable to our equipment is the standard written warranty applicable to the particular product and sale and Atlas makes no other warranty, express or implied. The only warranty applicable to our equipment is the standard written warranty applicable to the particular product and sale and Atlas makes no other warranty, express or implied. Products and services listed may be trademarks, service marks or trade-names of Atlas GmbH and/or its subsidiaries. All rights are reserved. Atlas® is a registered trademark of Atlas GmbH.
Copyright © 2024 Atlas GmbH.
Ref. no. 6203430

GANDERKESEE FACTORY
Atlas GmbH
Atlasstraße 6
D-27777 Ganderkesee,
Germany

Tel.: +49 (0) 4222 954 0
Fax: +49 (0) 4222 954 220
E-mail: info@atlasgmbh.com
www.atlasgmbh.com

VECHTA FACTORY
Atlas GmbH
Theodor-Heuss-Str. 3
D-49377 Vechta
Germany

T: +49 (0) 4441 954 0
F: +49 (0) 4441 954 299
E-mail: info@atlasgmbh.com
www.atlasgmbh.com

DELMENHORST FACTORY
Atlas GmbH
Stedinger Straße 324
D-27751 Delmenhorst
Germany

T: +49 (0) 4221 49 10
F: +49 (0) 4221 49 14 43
E-mail: info@atlasgmbh.com
www.atlasgmbh.com

ATLAS CRANES UK LTD
NATIONAL SALES & SERVICE FACILITY
Wharfedale Road,
Euroway Trading Est.
Bradford, England BD4 6SL
United Kingdom
T: +44 8444 99 66 88
F: +44 1274 65 37 85
E-mail: atlasuk@atlasgmbh.com
www.atlas-cranes.co.uk
www.atlasgmbh.com

ATLAS
SINCE 1919

Status: 09/2024