ATLAS 1919 - 2019

ATLAS SINCE 1919

FAST. RELIABLE. VERSATILE.

- 53 - 57 t
- 230 kW (313 HP)
  EU Stage V
- 18.1 - 21.9 m

MATERIAL HANDLING MACHINE 520MH

WWW.ATLASGMBH.COM

ATLAS – CONSTRUCTION MACHINERY MANUFACTURER WITH TRADITION

From person to person

When Hinrich Weyhausen started selling construction and agricultural machinery in 1919, he discovered that the machines which his customers actually needed were not available. So he listened to them carefully and went about building the machines himself – exactly according to the requirements of the people who used his machines every day. He carried out pioneering work with a passion under the brand name of Atlas.
His focus was always on the benefit of the machines. And nothing has changed for us in terms of this ideal today.

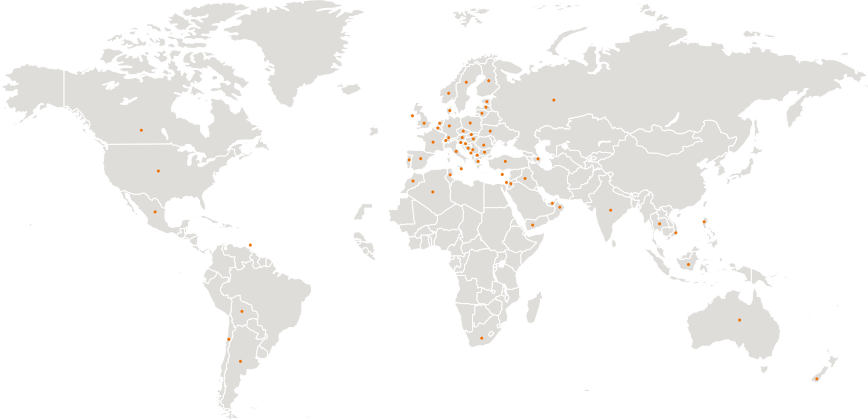

Atlas will make you strong with excellent products and a comprehensive service.

With highly motivated employees, a great deal of commitment and expertise ATLAS GmbH develops successful crane & excavator technologies. Numerous customers, engineers and experts all around the globe have made their contribution. The result is robust equipment to enable you to work more effectively and safely than ever before.

As our know-how grew, so too did our dealer and service network worldwide.
We can hence guarantee – in those days and today too – that we will always be on the spot when you need us.

Atlas manufactures a wide range of equipment for the construction, railroad, material handling and infrastructure industries. You will find more information on Atlas under **www.atlasgmbh.com.**

CONSTRUCTION

TRANSPORT

INFRASTRUCTURE

RECYCLING

CUSTOMER SATISFACTION IS OUR PRIORITY!

WE ARE COMMITTED
to providing our customers with highest quality products and services.

QUALITY STANDARDS AND CUSTOMER SATISFACTION
are measured in terms of service performance, reliability, relevance and timeliness.

OUR COMPANY'S MISSION, GOALS AND OBJECTIVES
are directed towards ongoing process improvement as a basis for strengthening our competitive position and for improving product quality and service standards.

QUALITY STANDARDS AND CUSTOMER SATISFACTION
are measured in terms of product performance and reliability.

PRODUCT RANGE
520MH

EXTENSIVE DEALER NETWORK
EXCELLENT SERVICE
CUSTOMER FOCUSED

ATLAS - The new excavator cabin

The new ATLAS cabin – Best climate, sharp display, digital and direct, more space, best view, extremely quiet, feel good

Clear control panel – Direct selection via keys or digital control via button.....

Most powerful air conditioning system - short airways - large lines - cross sections - silent

Move safely: Standard lateral- and rear view cameras

Best view – especially to the right

ATLAS - The new excavator cabin

Stay communicated - radio with USB connection - mobile phone tray by the left joystick

Lunch break - space for cool box with electrical connection - behind the driver's seat

Easy: Upper carriage lock at the push of a button on T

Bottle holder near the driver

Floor non-slip and
Easy to sweep – storage space for tools and materials

TECHNICAL SPECIFICATION 520MH

ENGINE

Power rating.....230 kW (313 HP)	Bore / cylinder stroke.....101 / 136	**STANDARD BASIC EQUIPMENT:**
RPM.....1800/min	Cooling system.....Water-cooled	• Automatic idling system / Engine stop
Model.....Deutz / TCD 7.8 L6 EU Stage V	Air filter.....Dry air filter	• Cold start assistance
Design.....Turbocharger / intercooler	Battery.....2 x 12 V / 143 Ah	• Diesel pre-filter
Cylinder capacity.....7800 cm^3	Generator.....28.5 V / 100 A	• Engine monitoring
Number of cylinders.....6	Starter.....24 V / 4.0 kW	

HYDRAULIC SYSTEM

• AWE 5 system (Load sensing)	• Pipe break protection valves for lifting and articulated cylinders	• Operating modes:
• Load limit controlled high-performance pump	• Proportional grab and grab rotating function	F1 (Fine)
• Fuel-efficient flow-on-demand control	• 3 circuits for additional consumer loads possible	F2 (Eco)
• Sensitive, proportional, independent control	• Max. oil flow.....2 x 380 l/min	F3 (Power)
• Primary and secondary protection against overload	• Max. operating pressure.....360 bar	• Accumulator for emergency lowering of the arm system
• Suction valves for all work functions	• Cylinder end position damping	• Load-limit control

SWING ASSEMBLY

• Axial piston motor with priority valve	• Automatically controlled multi-disc brake	• Swing torque.....164 kNm
• Planetary transmission	• Two, two-stage valves	• Max. swing speed.....5.2/min

TRACTION DRIVE AND BRAKES

• Variable displacement motor	• Automotive traveling and cruise control:	• Tractive force.....145 kN
• Manual gearbox	• Max. speed.....16 km/h	• Gradeability.....5.0 %
• Double-acting brake valve	• Off-road speed.....5 km/h	• Dual-circuit brake system..... Drum brake
• Travel direction pre-selection via switch in joystick	• Crawling speed.....1 km/h	• Parking brake.....Spring-loaded brake

UNDERCARRIAGE

• Steering axle with automatic oscillating axle locking	• Heavy duty axles	• STD tires: Mitas 12.00-20
• Additional axis locking via left joystick	• Toolbox in undercarriage	

WORKING EQUIPMENT 520MH

DRIVER´S CAB

- Meets latest safety standards (ROPS)
- Extra large entry zone
- Spacious leg room
- Radio preparation with mute function
- Ready for electric cooling box
- Different options for storage, compartment for documents
- Heat-absorbing glass, tinted windows
- Excellent all-way visibility
- Bottle holder

DRIVER'S SEAT:

- Comfort seat with headrest
- Arm rests and lumbar support
- Seat adjustable separately from console
- Air suspension
- Heated
- Horizontal and vertical suspension
- Lumbar support

CONTROL:

- Ergonomic joysticks with proportional slide control
- Slim steering column, height and tilt adjustable
- Indicators, controls and operating switches are clearly arranged
- Swing axle lock in the left joystick

MONITORING:

- Operating data display screen
- Automatic system for monitoring, warning and storage of data
- Rear view security camera
- Right side camera

CLIMATE CONTROL:

- Automatic climate control
- Excellent air distribution through optimally arranged nozzles
- Refrigerant R134a

SOUND LEVELS:

- ISO 6396 (L_pA) in driver's cab ..... 70 dB(A)
- 2000/14 EG (L_wA) ambience level ..... 102 dB(A)

ADDITIONAL EQUIPMENT

- Beacon light
- Gear protection
- Cabin Sliding door
- Cab protection guard
- Cab elevation
- Joystick steering
- 270º camera system
- LED working lights
- Alarm-signal while driving
- Auxiliary heating with water circuit
- Automatic working brake
- Switch hydraulic attachment kit, supports separately at front and rear
- Hydraulic add-on kit, switch supports axially separately
- Proportional control of supports by slide in joystick
- Automatically controlled and monitored electric central lubrication system for uppercarriage and arm equipment
- Premium Driver seat (Actimo Evolution)
- Electric cooling box
- Radio with USB
- GPS/GSM telemetric system for monitoring of operating data, consumption, position
- Biodegradable oil
- Refueling pump

Other additional equipment: See price list

Special options: upon request

FILL CAPACITIES

- Fuel tank .....920 litres
- Cooling system.....53 litres
- Engine oil.....21 litres
- Hydraulic tank .....720 litres
- Hydraulic system.....1400 litres
- Ad Blue® .....50 litres

OPERATING WEIGHTS

	MONOBLOCK BOOM 9.80 m (C94.5i)	MONOBLOCK BOOM 12.10 m (C94.6i) / (C94.16iD)
	Stick 7.50 m (D94.15i)	**Stick 9.24 m (D94.16i)**
4 support outriggers	53 t	54 t
1 m pylon	55 t	56 t
2 m pylon	56 t	57 t

Operating weight incl. driver, fuel, lubricants and coolant plus 1.0 ton for attachments

ATTACHMENTS

- Clamshell grab
- Orange peel grab
- Load hook
- Load lifting magnet
- Log grab
- Sorting grab

DO THE RIGHT JOB

FULL STEAM AHEAD

Get your cargo handling moving.
In times of rapid growth in the transport sector you need handling equipment with which you can work fast.

Particularly good for port use:

- Low costs per tonne thanks to fast and responsive operation and low-maintenance processing.
- High handling capacity thanks to enormous lifting power.
- Arm construction specially designed to clear ships' sides.
- Cab system with Vario cab.
- Can be supplied with pylon upon request.

RECYCLING & SCRAP

PORTS

STABILITY

- Here the new undercarriage with moving pads and new ascent to get more comfortable in the cabin.

- New outrigger pads for increased stability again.

RELIABLE – BECAUSE EVERY MINUTE COUNTS

Our market leadership is based on our well-proven technology tried and tested a thousand times over in the most arduous applications. High-tensile steels, robust electric and electronic components as well as excellent workmanship in all hydraulic components ensure that the material handler is the reliable heart on any construction site.

WORKING RANGES 520MH

Loading boom 9.80 m (C94.5i) with Stick 7.50 m (D94.15i)

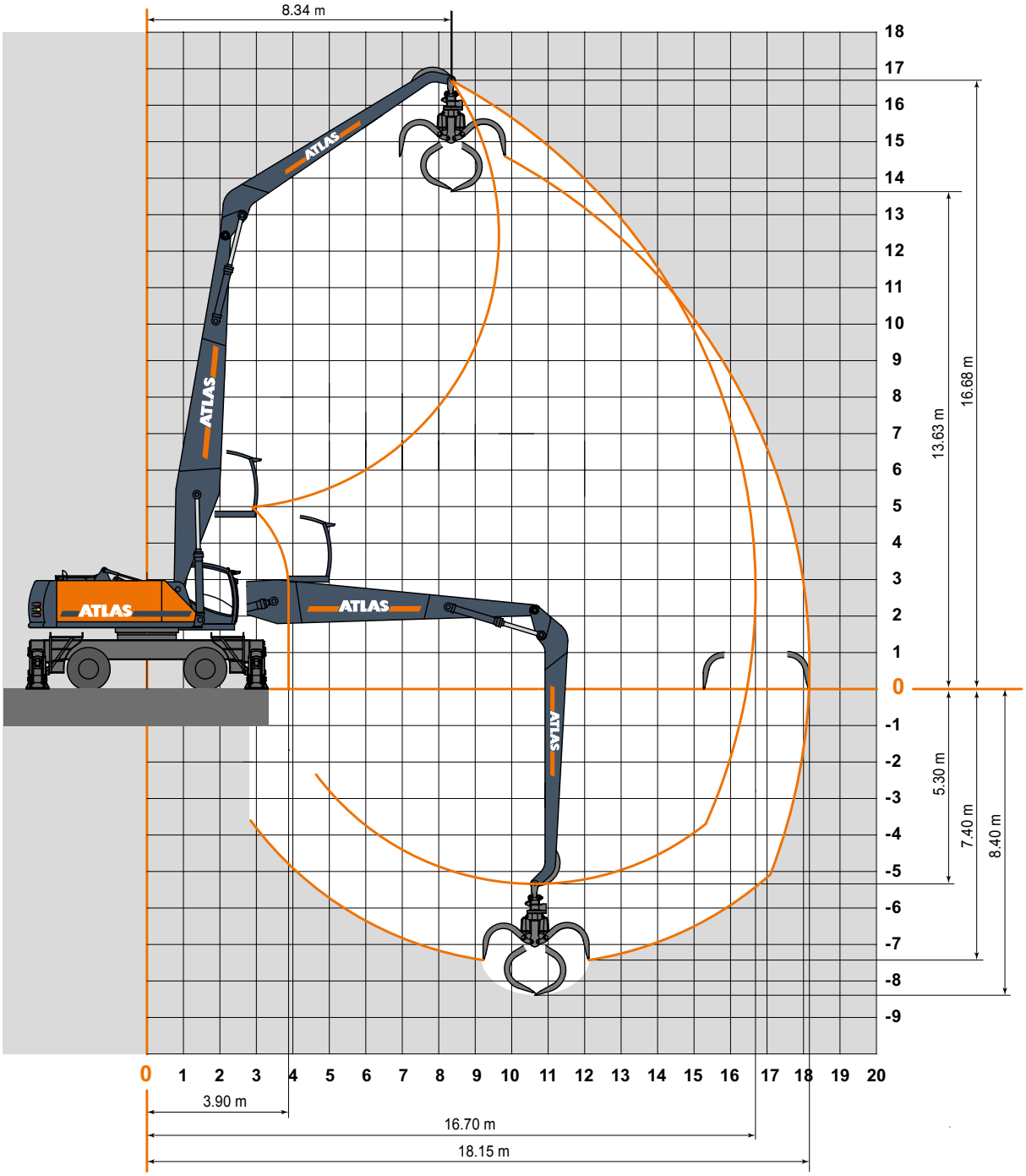

Attachments

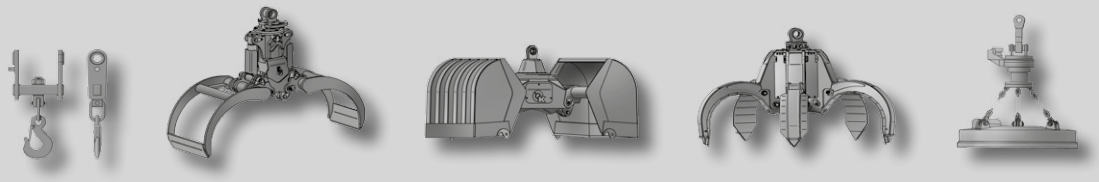

Load hook | Log grab | Clamshell grab | Orange peel grab | Load lifting magnet

LIFTING CAPACITIES 520MH

Lifting Capacities Loading boom 9.80 m (C94.5i) with Stick 7.50 m (D 94.15i). Max. reach 18.15 m

HEIGHT		6.0 m		7.5 m		9.0 m		10.5 m		12.0 m		13.5 m		15.0 m		16.5 m		18.0 m		19.5 m	
		FRONT	LATERAL	FRONT	LATERAL	FRONT	LATERAL	FRONT	LATERAL	FRONT	LATERAL	FRONT	LATERAL	FRONT	LATERAL	FRONT	LATERAL	FRONT	LATERAL	FRONT	LATERAL
18.0 m	outriggers down																				
	outriggers up																				
16.5 m	outriggers down																				
	outriggers up																				
15.0 m	outriggers down							7.9	7.9												
	outriggers up							7.9	6.9*												
13.5 m	outriggers down							7.7	7.7	7.3	7.3										
	outriggers up							7.7	7.1*	7.0*	5.6*										
12.0 m	outriggers down							7.6	7.6	7.2	7.2										
	outriggers up							7.6	7.1*	7.0*	5.6*										
10.5 m	outriggers down							7.8	7.8	7.2	7.2	6.8	6.8								
	outriggers up							7.8	7.0*	7.0*	5.6*	5.7*	4.5*								
9.0 m	outriggers down							8.0	8.0	7.4	7.4	6.9	6.9	6.5	6.5						
	outriggers up							8.0	6.9*	6.9*	5.5*	5.7*	4.4*	4.7*	3.6*						
7.5 m	outriggers down					9.4	9.4	8.4	8.4	7.7	7.7	7.1	7.1	6.6	6.6						
	outriggers up					9.4	8.5*	8.4*	6.7*	6.8*	5.3*	5.6*	4.3*	4.6*	3.6*						
6.0 m	outriggers down			11.8	11.8	10.1	10.1	8.9	8.9	8.0	8.0	7.3	7.3	6.7	6.7						
	outriggers up			11.8	10.7*	10.1	8.1*	8.1*	6.4*	6.6*	5.1*	5.4*	4.2*	4.5*	3.5*						
4.5 m	outriggers down	16.6	16.6	13.1	13.1	10.9	10.9	9.4	9.4	8.3	8.3	7.5	7.5	6.8	6.8						
	outriggers up	16.6	13.5*	12.7*	9.9*	9.7*	7.6*	7.7*	6.0*	6.3*	4.9*	5.3*	4.1*	4.4*	3.4*						
3.0 m	outriggers down	18.8	18.8	14.4	14.4	11.7	11.7	9.9	9.9	8.7	8.7	7.7	7.7	6.9	6.9						
	outriggers up	16.0*	12.1*	11.8*	9.0*	9.2*	7.1*	7.4*	5.7*	6.1*	4.7*	5.1*	3.9*	4.3*	3.3*						
1.5 m	outriggers down	5.8	5.8	15.3	15.3	12.3	12.3	10.3	10.3	8.9	8.9	7.8	7.8	7.0	7.0						
	outriggers up	5.8	5.8	11.1*	8.3*	8.7*	6.6*	7.1*	5.4*	5.9*	4.5*	4.9*	3.7*	4.2*	3.2*						
0 m	outriggers down	4.7	4.7	14.0	14.0	12.7	12.7	10.6	10.6	9.1	9.1	7.9	7.9	7.0	6.9*						
	outriggers up	4.7	4.7	10.5*	7.8*	8.3*	6.3*	6.8*	5.1*	5.7*	4.3*	4.8*	3.6*	4.1*	3.1*						
- 1.5 m	outriggers down	5.1	5.1	11.4	11.4	12.7	12.7	10.6	10.6	9.1	9.1	7.8	7.8	6.8	6.8						
	outriggers up	5.1	5.1	10.2*	7.5*	8.0*	6.0*	6.6*	4.9*	5.5*	4.1*	4.7*	3.5*	4.1*	3.0*						
- 3.0 m	outriggers down	6.1	6.1	11.2	11.2	12.4	12.4	10.4	10.4	8.9	8.9	7.6	7.6	6.5	6.5						
	outriggers up	6.1	6.1	10.1*	7.4*	7.9*	5.9*	6.5*	4.8*	5.4*	4.1*	4.7*	3.5*	4.1*	3.0*						
-4.5 m	outriggers down			12.0	12.0	11.7	11.7	9.9	9.9	8.4	8.4	7.1	7.1								
	outriggers up			10.1*	7.4*	7.9*	5.9*	6.4*	4.8*	5.4*	4.0*	4.7*	3.5*								
-6.0 m	outriggers down																				
	outriggers up																				

The specified max. loading capacities in tonnes include a stability of 25% or are calculated at 87% of the hydraulic lifting power, as per ISO10567. These values are applicable at the tip of the arm (without tipping cylinder and reversing linkage) with optimum positioning of the corresponding arm system. Weights of attached load carrying accessories (grab, magnet, load hook, etc.) are not included with the load carrying values. * Value limited due to hydraulics.

WORKING RANGES 520MH

Loading boom 12.10 m (C94.6i) with Stick 9.24 m (D94.16i)

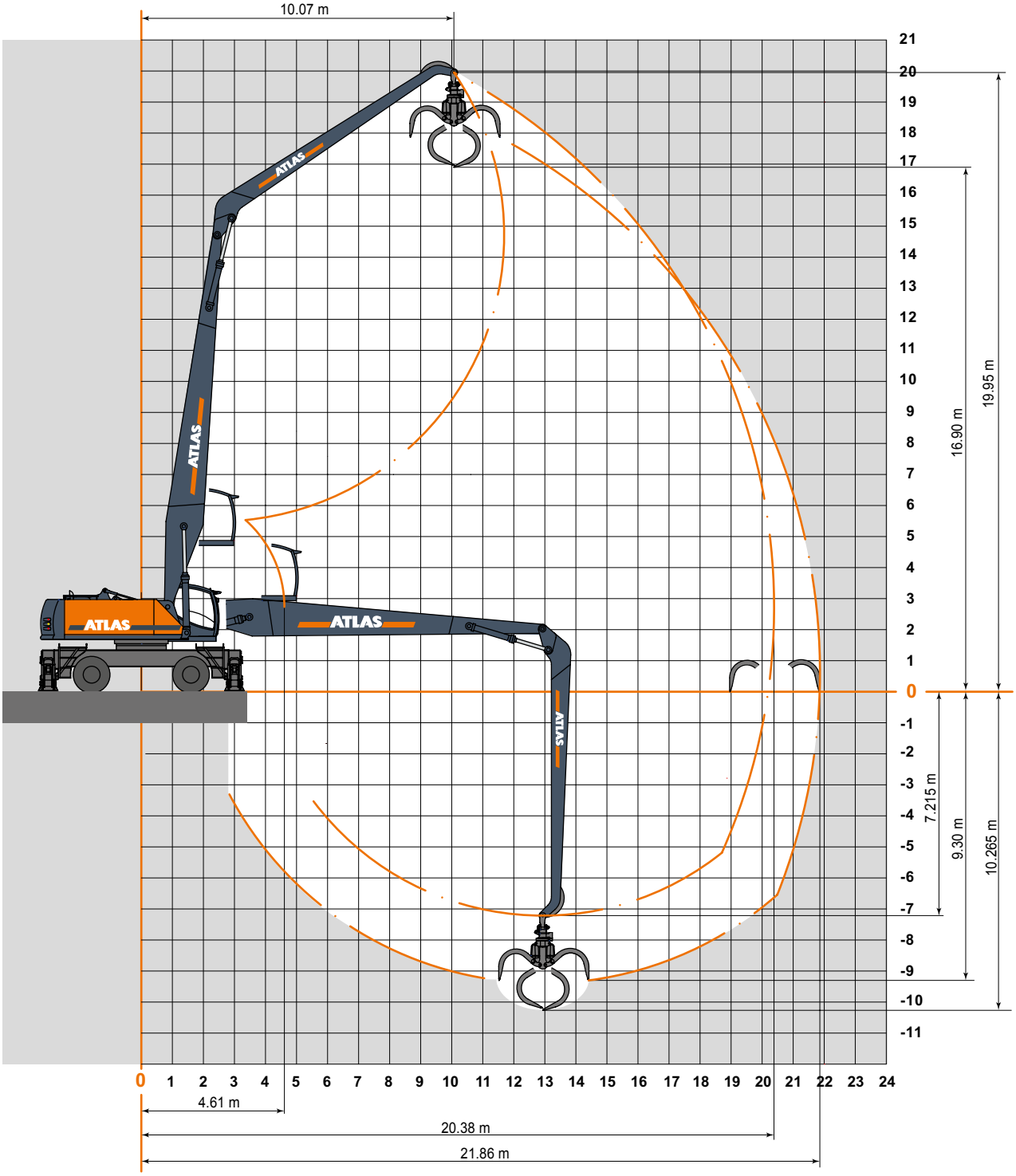

Attachments

Load hook

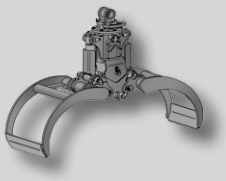

Log grab

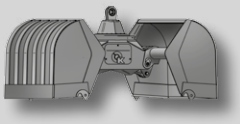

Clamshell grab

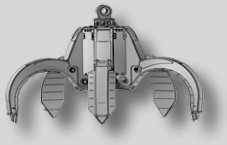

Orange peel grab

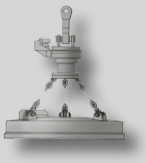

Load lifting magnet

LIFTING CAPACITIES 520MH

Lifting Capacities Loading boom 12.10 m (C94.6i) with Stick 9.24 m (D 94.16i). Max. reach 21.86 m

HEIGHT		6.0 m		7.5 m		9.0 m		10.5 m		12.0 m		13.5 m		15.0 m		16.5 m		18.0 m		19.5 m	
		FRONT	LATERAL	FRONT	LATERAL	FRONT	LATERAL	FRONT	LATERAL	FRONT	LATERAL	FRONT	LATERAL	FRONT	LATERAL	FRONT	LATERAL	FRONT	LATERAL	FRONT	LATERAL
18.0 m	outriggers down																				
	outriggers up																				
16.5 m	outriggers down											5.3	5.3								
	outriggers up											5.3	4.6*								
15.0 m	outriggers down											5.2	5.2	4.9	4.9						
	outriggers up											5.2	4.6*	4.8*	3.7*						
13.5 m	outriggers down											5.2	5.2	4.9	4.9	4.6	4.6				
	outriggers up											5.2	4.6*	4.8*	3.7*	3.9*	2.9*				
12.0 m	outriggers down											5.3	5.3	4.9	4.9	4.6	4.6				
	outriggers up											5.3	4.6*	4.7*	3.7*	3.9*	2.9*				
10.5 m	outriggers down									5.9	5.9	5.4	5.4	5.0	5.0	4.6	4.6	4.3	4.3		
	outriggers up									5.9	5.6*	5.4	4.5*	4.7*	3.6*	3.8*	2.9*	3.2*	2.3*		
9.0 m	outriggers down									6.2	6.2	5.6	5.6	5.1	5.1	4.7	4.7	4.3	4.3		
	outriggers up									6.2	5.4*	5.5*	4.3*	4.5*	3.5*	3.7*	2.8*	3.1*	2.3*		
7.5 m	outriggers down							7.2	7.2	6.4	6.4	5.8	5.8	5.2	5.2	4.8	4.8	4.4	4.4	4.1	4.1
	outriggers up							7.2	6.4*	6.4	5.1*	5.3*	4.1*	4.4*	3.3*	3.6*	2.7*	3.0*	2.2*	2.5*	1.7*
6.0 m	outriggers down			10.8	10.8	9.0	9.0	7.7	7.7	6.7	6.7	6.0	6.0	5.4	5.4	4.9	4.9	4.5	4.5	4.1	4.1
	outriggers up			10.8	10.1*	9.0	7.6*	7.7	6.0*	6.2*	4.8*	5.1*	3.8*	4.2*	3.1*	3.5*	2.6*	2.9*	2.1*	2.5*	1.7*
4.5 m	outriggers down	15.5	15.5	11.8	11.8	9.6	9.6	8.1	8.1	7.0	7.0	6.2	6.2	5.5	5.5	5.0	5.0	4.5	4.5	4.1	4.1
	outriggers up	15.5	12.2*	11.8*	9.0*	9.0*	6.9*	7.2*	5.5*	5.8*	4.4*	4.8*	3.6*	4.0*	2.9*	3.4*	2.4*	2.8*	2.0*	2.4*	1.6*
3.0 m	outriggers down	2.3	2.3	12.8	12.8	10.2	10.2	8.5	8.5	7.3	7.3	6.4	6.4	5.6	5.6	5.1	5.1	4.6	4.6	4.1	4.1
	outriggers up	2.3	2.3	10.5*	7.8*	8.2*	6.2*	6.6*	5.0*	5.4*	4.0*	4.5*	3.3*	3.8*	2.7*	3.2*	2.3*	2.7*	1.9*	2.3*	1.6*
1.5 m	outriggers down	8.1	8.1	6.1	6.1	10.6	10.6	8.8	8.8	7.5	7.5	6.5	6.5	5.7	5.7	5.1	5.1	4.6	4.6	4.1	4.1
	outriggers up	8.1	8.1	6.1	6.1	7.6*	5.5*	6.2*	4.5*	5.1*	3.7*	4.3*	3.1*	3.6*	2.6*	3.1*	2.1*	2.6*	1.8*	2.2*	1.5*
0 m	outriggers down			4.2	4.2	10.9	10.9	9.0	9.0	7.6	7.6	6.6	6.6	5.8	5.8	5.1	5.1	4.6	4.6	4.1	4.1
	outriggers up			4.2	4.2	7.0*	5.0*	5.8*	4.1*	4.8*	3.4*	4.0*	2.9*	3.4*	2.4*	2.9*	2.0*	2.5*	1.7*	2.2*	1.4*
- 1.5 m	outriggers down			4.0	4.0	9.1	9.1	9.0	9.0	7.7	7.7	6.6	6.6	5.8	5.8	5.1	5.1	4.5	4.5	4.0	4.0
	outriggers up			4.0	4.0	6.6*	4.6*	5.5*	3.8*	4.6*	3.2*	3.9*	2.7*	3.3*	2.3*	2.8*	1.9*	2.5*	1.6*	2.1*	1.4*
- 3.0 m	outriggers down			4.3	4.3	8.3	8.3	8.9	8.9	7.6	7.6	6.6	6.6	5.7	5.7	5.0	5.0	4.4	4.4		
	outriggers up			4.3	4.3	6.4*	4.4*	5.2*	3.6*	4.4*	3.0*	3.7*	2.5*	3.2*	2.2*	2.8*	1.8*	2.4*	1.6*		
-4.5 m	outriggers down			4.9	4.9	8.4	8.4	8.6	8.6	7.4	7.4	6.4	6.4	5.5	5.5	4.8	4.8	4.2	4.2		
	outriggers up			4.9	4.9	6.3*	4.3*	5.1*	3.5*	4.3*	2.9*	3.6*	2.5*	3.1*	2.1*	2.7*	1.8*	2.4*	1.6*		
-6.0 m	outriggers down					8.9	8.9	8.2	8.2	7.0	7.0	6.1	6.1	5.2	5.2	4.5	4.5				
	outriggers up					6.3*	4.3*	5.1*	3.5*	4.3*	2.9*	3.6*	2.4*	3.1*	2.1*	2.7*	1.8*				

The specified max. loading capacities in tonnes include a stability of 25% or are calculated at 87% of the hydraulic lifting power, as per ISO10567. These values are applicable at the tip of the arm (without tipping cylinder and reversing linkage) with optimum positioning of the corresponding arm system. Weights of attached load carrying accessories (grab, magnet, load hook, etc.) are not included with the load carrying values. * Value limited due to hydraulics.

WORKING RANGES 520MH

Loading boom 12.10 m (C94.6iB) with Stick 9.24 m (D94.16i)

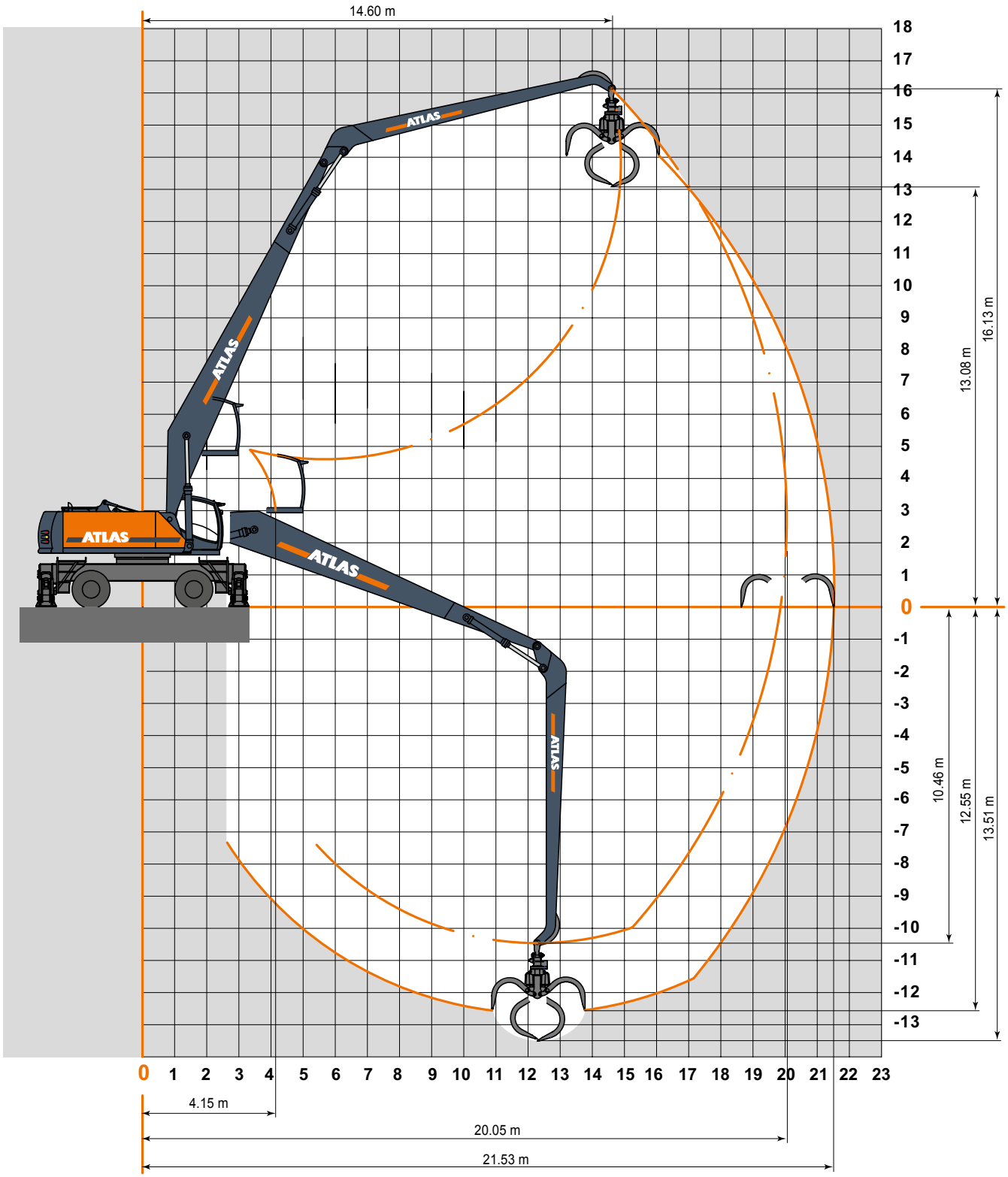

LIFTING CAPACITIES 520MH

Lifting Capacities Loading boom 12.10 m (C94.6iB) with Stick 9.24 m (D 94.16i). Max. reach 21.53 m

HEIGHT		6.0 m		7.5 m		9.0 m		10.5 m		12.0 m		13.5 m		15.0 m		16.5 m		18.0 m		19.5 m	
		FRONT	LATERAL	FRONT	LATERAL	FRONT	LATERAL	FRONT	LATERAL	FRONT	LATERAL	FRONT	LATERAL	FRONT	LATERAL	FRONT	LATERAL	FRONT	LATERAL	FRONT	LATERAL
18.0 m	outriggers down																				
	outriggers up																				
16.5 m	outriggers down															3.8*	3.8*				
	outriggers up															3.8	3.1				
15.0 m	outriggers down															3.8*	3.8*				
	outriggers up															3.8	3.1				
13.5 m	outriggers down															3.9*	3.9*	3.8*	3.8*		
	outriggers up															3.9	3.0	3.3	2.4		
12.0 m	outriggers down													4.2*	4.2*	4.0*	4.0*	3.9*	3.9*		
	outriggers up													4.2*	3.6	3.9	2.9	3.2	2.4		
10.5 m	outriggers down													4.4*	4.4*	4.2*	4.2*	4.0*	4.0*		
	outriggers up													4.4*	3.5	3.8	2.8	3.1	2.3		
9.0 m	outriggers down									5.6*	5.6*	5.1*	5.1*	4.7*	4.7*	4.4*	4.4*	4.1*	4.1*	3.9*	3.9*
	outriggers up									5.6*	5.0	5.1*	4.0	4.3	3.3	3.6	2.7	3.0	2.2	2.5	1.8
7.5 m	outriggers down					8.1*	8.1*	6.9*	6.9*	6.0*	6.0*	5.4*	5.4*	4.9*	4.9*	4.6*	4.6*	4.3*	4.3*	4.0*	4.0*
	outriggers up					8.1*	7.1	6.9*	5.7	6.0	4.6	5.0	3.8	4.1	3.1	3.5	2.5	3.0	2.1	2.5	1.7
6.0 m	outriggers down	2.4*	2.4*	11.4*	11.4*	9.1*	9.1*	7.6*	7.6*	6.5*	6.5*	5.8*	5.8*	5.2*	5.2*	4.8*	4.8*	4.4*	4.4*	4.1*	4.1*
	outriggers up	2.4*	2.4*	10.8	8.0	8.5	6.4	6.8	5.1	5.6	4.2	4.7	3.5	3.9	2.9	3.3	2.4	2.8	2.0	2.4	1.6
4.5 m	outriggers down			6.1*	6.1*	9.9*	9.9*	8.2*	8.2*	7.0*	7.0*	6.1*	6.1*	5.5*	5.5*	5.0*	5.0*	4.6*	4.6*	4.2*	4.2*
	outriggers up			6.1*	6.1*	7.7	5.7	6.3	4.6	5.2	3.8	4.4	3.2	3.7	2.7	3.2	2.2	2.7	1.9	2.3	1.5
3.0 m	outriggers down			4.4*	4.4*	10.6*	10.6*	8.7*	8.7*	7.4*	7.4*	6.4*	6.4*	5.7*	5.7*	5.2*	5.2*	4.7*	4.7*	4.3*	4.3*
	outriggers up			4.4*	4.4*	7.2	5.1	5.9	4.2	4.9	3.5	4.1	3.0	3.5	2.5	3.0	2.1	2.6	1.7	2.2	1.5
1.5 m	outriggers down			4.2*	4.2*	9.2*	9.2*	9.1*	9.1*	7.7*	7.7*	6.7*	6.7*	6.0*	6.0*	5.3*	5.3*	4.8*	4.8*	4.4*	4.4*
	outriggers up			4.2*	4.2*	6.8	4.7	5.6	3.9	4.6	3.3	3.9	2.8	3.4	2.3	2.9	2.0	2.5	1.7	2.2	1.4
0 m	outriggers down			4.5*	4.5*	8.5*	8.5*	9.4*	9.4*	8.0*	8.0*	7.0*	6.9*	6.1*	6.1*	5.4*	5.4*	4.9*	4.9*		
	outriggers up			4.5*	4.5*	6.5	4.5	5.3	3.7	4.5	3.1	3.8	2.6	3.2	2.2	2.8	1.9	2.4	1.6		
- 1.5 m	outriggers down			5.1*	5.1*	8.6*	8.6*	9.6*	9.6*	8.1*	8.1*	7.0*	7.0*	6.2*	6.2*	5.5*	5.5*	5.0*	4.9*		
	outriggers up			5.1*	5.1*	6.4	4.4	5.2	3.6	4.3	3.0	3.7	2.5	3.2	2.1	2.7	1.8	2.4	1.6		
- 3.0 m	outriggers down			5.6*	5.9*	9.1*	9.1*	9.6*	9.6*	8.2*	8.2*	7.1*	7.1*	6.2*	6.2*	5.5*	5.5*				
	outriggers up			5.6*	5.6	6.3	4.3	5.1	3.5	4.3	2.9	3.6	2.4	3.1	2.1	2.7	1.8				
-4.5 m	outriggers down			6.7*	6.7*	9.9*	9.9*	9.5*	9.5*	8.1*	8.1*	7.0*	7.0*	6.1*	6.1*	5.3*	5.3*				
	outriggers up			6.7*	5.7	6.4	4.4	5.1	3.5	4.3	2.9	3.6	2.4	3.2	2.1	2.7	1.8				
-6.0 m	outriggers down					10.8*	10.8*	9.1*	9.1*	7.8*	7.8*	6.7*	6.7*	5.8*	5.8*						
	outriggers up					6.5	4.5	5.2	3.6	4.3	3.0	3.7	2.5	3.2	2.1						

The specified max. loading capacities in tonnes include a stability of 25% or are calculated at 87% of the hydraulic lifting power, as per ISO10567. These values are applicable at the tip of the arm (without tipping cylinder and reversing linkage) with optimum positioning of the corresponding arm system. Weights of attached load carrying accessories (grab, magnet, load hook, etc.) are not included with the load carrying values. * Value limited due to hydraulics.

DIMENSION 520MH

520MH Transport position

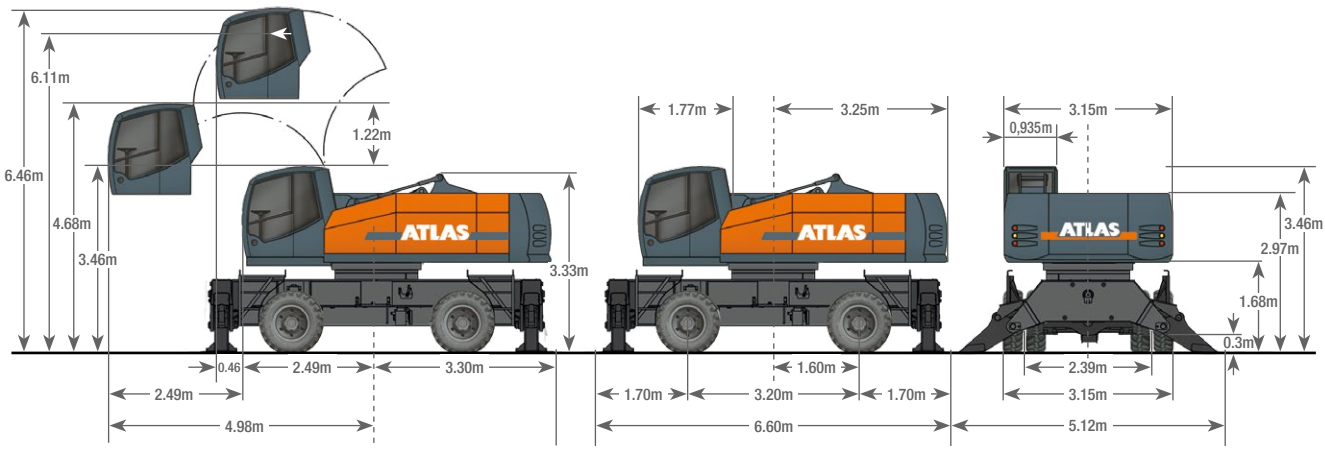

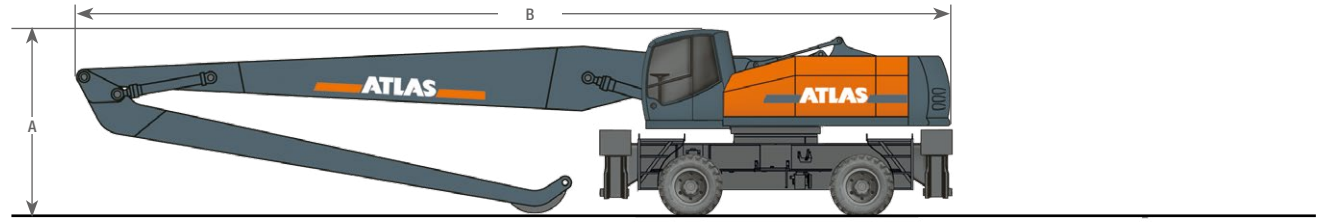

A	TRANSPORT HEIGHT	B	TRANSPORT LENGTH
	Loading boom 9.80 m (C94.5i) with Stick 7.50 m (D94.15i).....3.46 m		Loading boom 9.80 m (C94.5i) with Stick 7.50 m D94.15i).....14.10 m
	Loading boom 12.10 m (C94.6i) with Stick 9.24 m (D94.16i).....3.46 m		Loading boom 12.10 m (C94.6i) with Stick 9.24 m (D94.16i).....16.40 m
	Loading boom 12.10 m (C94.6id) with Stick 9.24 m (D94.16i).....3.47 m		Loading boom 12.10 m (C94.6id) with Stick 9.24 m D94.16i)..... 16.23 m

520MH-EN (1) Effective date: 11/2022. Product specifications and prices are subject to change without notice or obligation. The photographs and/or drawings in this document are for illustrative purposes only. Refer to the appropriate Operator's Manual for instructions on the proper use of this equipment. Failure to follow the appropriate Operator's Manual when using our equipment or to otherwise act irresponsibly may result in serious injury or death. The only warranty applicable to our equipment is the standard written warranty applicable to the particular product and sale and Atlas makes no other warranty, express or implied. The only warranty applicable to our equipment is the standard written warranty applicable to the particular product and sale and Atlas makes no other warranty, express or implied. Products and services listed may be trademarks, service marks or trade-names of Atlas GmbH and/or its subsidiaries. All rights are reserved. Atlas® is a registered trademark of Atlas GmbH.
Copyright © 2022 Atlas GmbH.
Ref. no. 6203431

GANDERKESEE FACTORY
Atlas GmbH
Atlasstraße 6
D-27777 Ganderkesee,
Germany

Tel.: +49 (0) 4222 954 0
Fax: +49 (0) 4222 954 220
E-mail: info@atlasgmbh.com
www.atlasgmbh.com

VECHTA FACTORY
Atlas GmbH
Theodor-Heuss-Str. 3
D-49377 Vechta
Germany

T: +49 (0) 4441 954 0
F: +49 (0) 4441 954 299
E-mail: info@atlasgmbh.com
www.atlasgmbh.com

DELMENHORST FACTORY
Atlas GmbH
Stedinger Straße 324
D-27751 Delmenhorst
Germany

T: +49 (0) 4221 49 10
F: +49 (0) 4221 49 14 43
E-mail: info@atlasgmbh.com
www.atlasgmbh.com

ATLAS CRANES UK LTD
NATIONAL SALES & SERVICE FACILITY
Wharfedale Road,
Euroway Trading Est.
Bradford, England BD4 6SL
United Kingdom
T: +44 8444 99 66 88
F: +44 1274 65 37 85
E-mail: atlasuk@atlasgmbh.com
www.atlas-cranes.co.uk
www.atlasgmbh.com

ATLAS
SINCE 1919

Status: 11/2022